THIS DRAWING IS UNPUBLISHED. RELEASED FOR PUBLICATION 1999
© COPYRIGHT 2009 BY TYCO ELECTRONICS CORPORATION. ALL INTERNATIONAL RIGHTS RESERVED.

PROJEKT NO.
A98-52279
B916704

LOC A1 DIST -

REVISIONS

P	LTR	DESCRIPTION	DATE	DWN	APVD
	B3	SEE E-08-26812	23OCT08	HSCH	AK
	B4	SEE E-09-023384	14JAN10	FU	HS

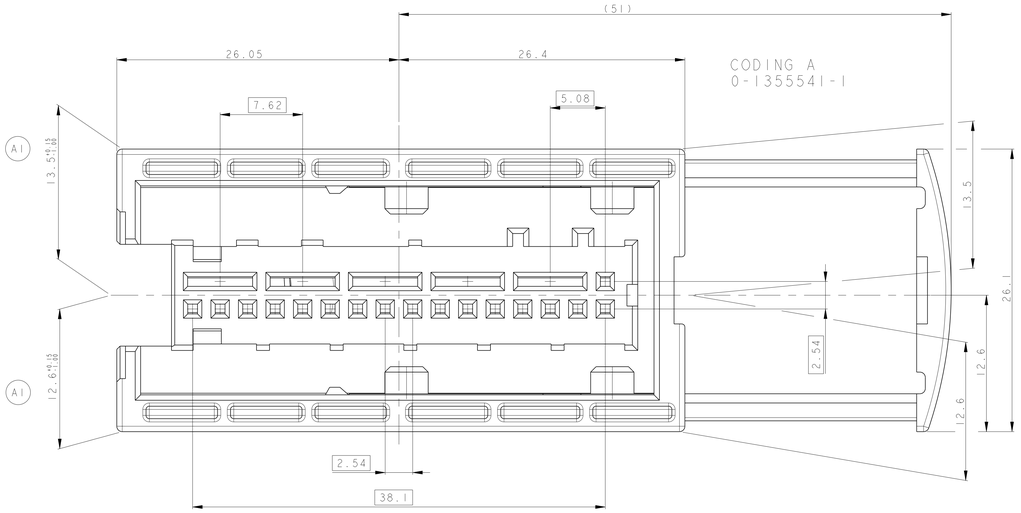

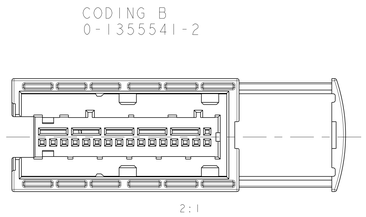

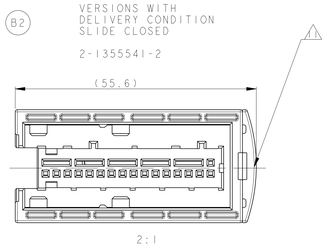

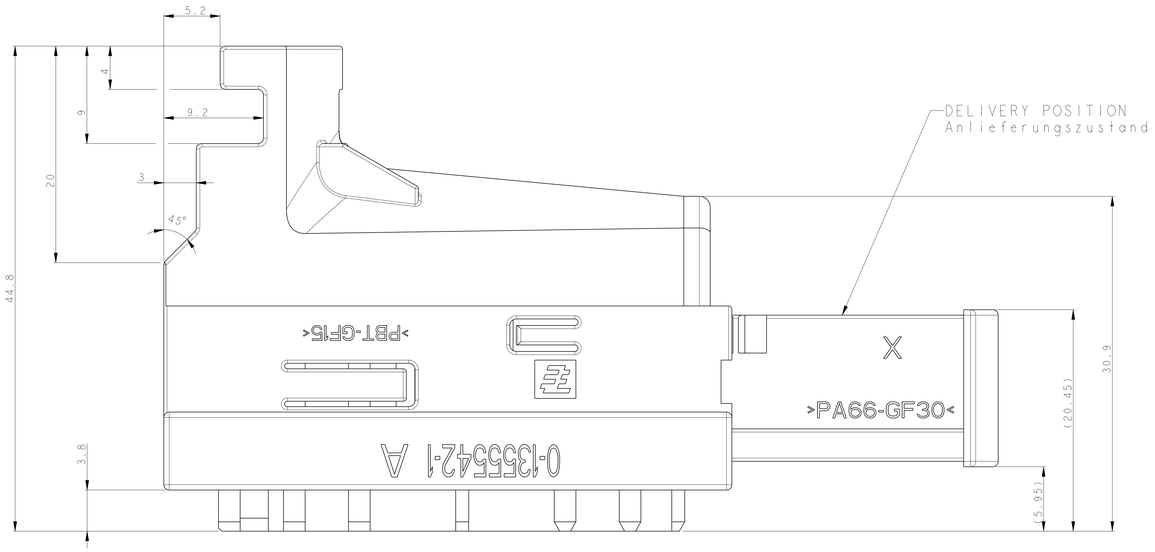

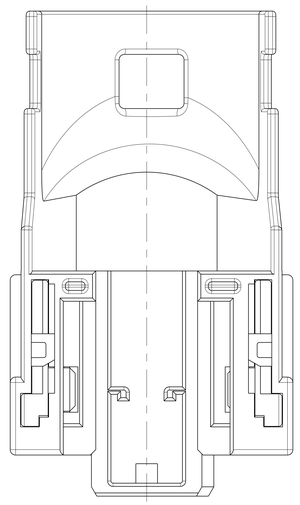

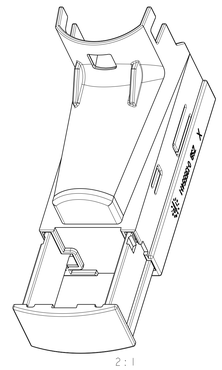

0-1355589-1	32POS MODUII PINHEADER, 90° VERSION, RIGHT,COD A
	32POS MODUII PINHEADER, 90° VERSION, LEFT,COD A
	5xTAB5.2mm+2xMODUII PINHEADER, 180° VERSION,COD A
0-1355587-1/-2	32POS MODUII PINHEADER, 180° VERSION,COD. A AND B
0-1241725-1	5xPQ+2xMQS RECEPTACLE HOUSING
0-1241724-1	32POS MQS RECEPTACLE HOUSING
114-18079	INTERFACEDRAWING FOR 5xPQ+2xMQS CONNECTOR
114-18078	INTERFACEDRAWING FOR 32POS MQS CONNECTOR
NUMBER NUMMER	DESCRIPTION BESCHREIBUNG
COUNTERPARTS GEGENSTECKER	

A1

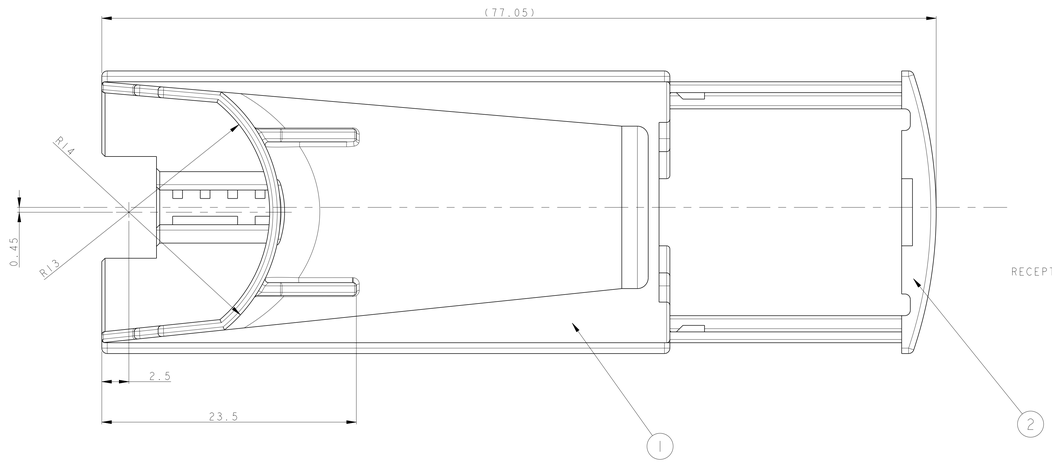

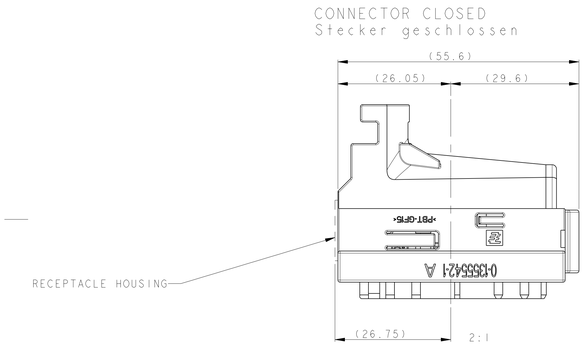

NOTES
Bemerkungen

B4
1. AMP or TE-LOGO
AMP or TE-Logo
2. ORDER-NUMBER
Bestell-Nummer
3. REVISIONS-NUMBER
Werkzeugenderungsindex
4. GM-LOGO
GM-Logo
5. CAVITY MARKING
Nestmarkierung
6. CUSTOMER SIGN
Kunden-Kurzzeichen
7. PACKAGE: IN LAYERS IN CARTON
Verpackung: Teile lagenweise im Karton
8. MATERIAL MARKING
Werkstoffkennzeichnung
9. PRODUCTION-DATE
Produktions-Datum
B1 10. SPECIAL PACKAGE FOR RUDE TRANSPORT: 180 PIECES IN LAYERS IN CARTON
Spezialverpackung fuer rauhen Transport: 180 Teile lagenweise im Karton
B2 11. BEFORE MATING WITH COUNTERPART MOVE SLIDE IN PRELOCK-POSITION
Vor dem Stecken auf das Gegenstueck zuerst den Schieber in Vorrastsstellung schieben

	ORDER NO. BESTELLNR.	REV -	QTY	DESCRIPTION BESCHREIBUNG	MATERIAL -	SURFACE COLOR	WEIGHT GEWICHT [g]	ITEM NO
B2 1	2-1355541-2	A	1	SLIDE	PA66-GF 30	RED	-	
			1	COVER CODING B	PBT-GF 15	BLUE	-	
B3 6	1-1355541-2	B	1	SLIDE	PA66-GF 30	RED	-	
			1	COVER CODING B	PBT-GF 15	BLUE	-	
B1 10	1-1355541-1	A	1	SLIDE	PA66-GF 30	RED	-	
			1	COVER CODING A	PBT-GF 15	BLACK	-	
7	0-1355541-2	B	1	SLIDE (B)	PA66-GF 30	RED	-	
			1	COVER CODING B	PBT-GF 15	BLUE	-	
7	0-1355541-1	B	1	SLIDE (B)	PA66-GF 30	RED	3,4	2
			1	COVER CODING A	PBT-GF 15	BLACK	12,1	1

TYC DRAWING IS A CONFIDENTIAL DOCUMENT OF TYCO ELECTRONICS CORPORATION
IT IS LOANED AND THE COPIES OR INFORMATION THEREON MUST BE RETURNED UPON REQUEST.

DIMENSIONS: mm
TOLERANCES UNLESS OTHERWISE SPECIFIED:
0 PLC ±0.3
1 PLC ±0.3
2 PLC ±0.3
3 PLC ±0.3
4 PLC ±0.3
ANGLES ±1°
MATERIAL -
FINISH -

DWN H.Schmitt 11JUN99
CHK H.Schmitt 18APR00
APVD -
PRODUCT SPEC - -
APPLICATION SPEC - -
WEIGHT 15.5 g

Tyco Electronics
AMP Deutschland GmbH
D - 63225 Langen

NAME COVER WITH SLIDE, 32POS MQS, ASSY
UMGEHAEUSE MIT SCHIEBER

SIZE A0 CAGE CODE 00779 DRAWING NO C-1355541 RESTRICTED TO -

CUSTOMER DRAWING SCALE 5:1 SHEET 1 OF 1 REV B4

4806 (2/09)
Proj/ENGINEER_DRAWING

X-ON Electronics

Largest Supplier of Electrical and Electronic Components

Click to view similar products for Automotive Connectors ***category:***

Click to view products by TE Connectivity ***manufacturer:***

Other Similar products are found below :

003-018-000 60403001 60993906-B M902-2131 M902-2161 72.330.1035.1 73.353.4028.0 F119300-B F166900 F258300-B F358300-B F407400 F444110 F487000 F509500B-B 827153-1 8N1515-32-24P 9-1326729-8 925474-1 928905-1 964562-4 968782-1 GT17SA-8DS-HU 98891-1012 98947-1016 12004147 12004475-L 12010290 12010309-B 12015454 12020219-B 12020308 12041318-B 12052225-L 12052466 12059125 12064869 12004327-B 12010503-B 12015308 12015384 12015909 1-21030-1 12041254 12041318 12047946-B 12047957 12047957-L 12059473 12066261