THIS DRAWING IS UNPUBLISHED. RELEASED FOR PUBLICATION
© COPYRIGHT ALL RIGHTS RESERVED.

LOC	DIST
J	ZDI

REVISIONS 変更

P	LTR	DESCRIPTION	DATE	DWN	APVD
	B1	REVISED PER ECO-11-005030	24MAR11	RK	HMR
	C	REVISE PER ECR-14-001819	11FEB14	E.C	H.M

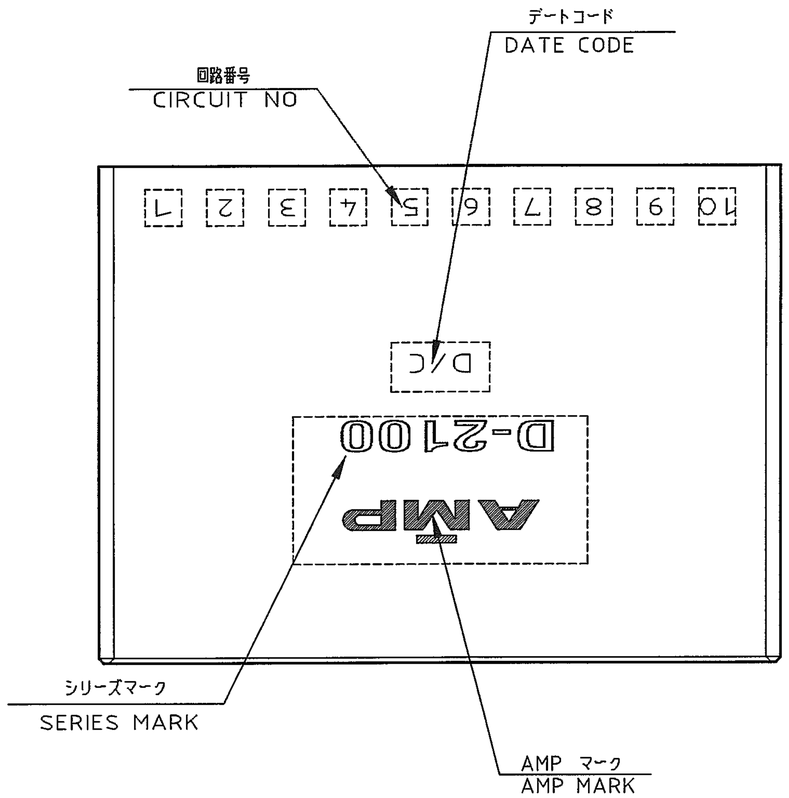

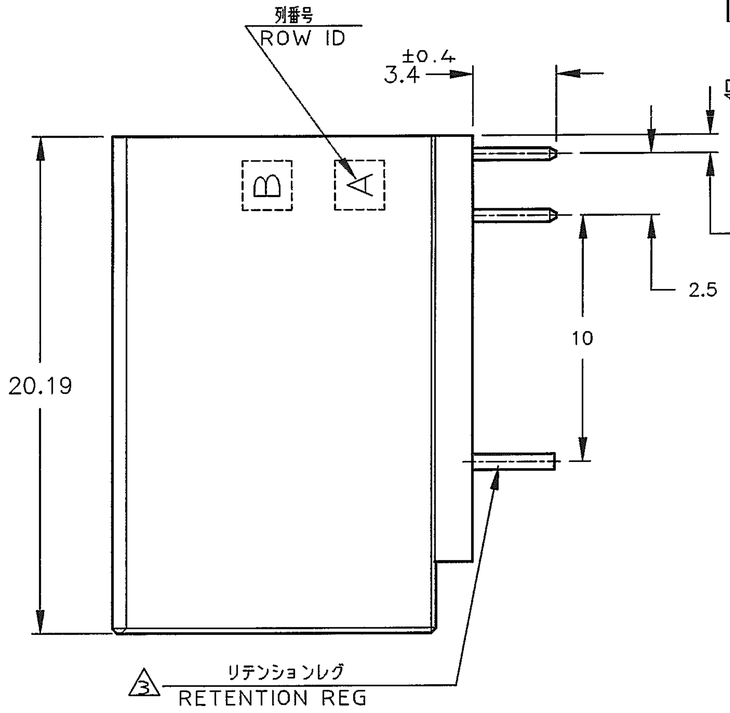

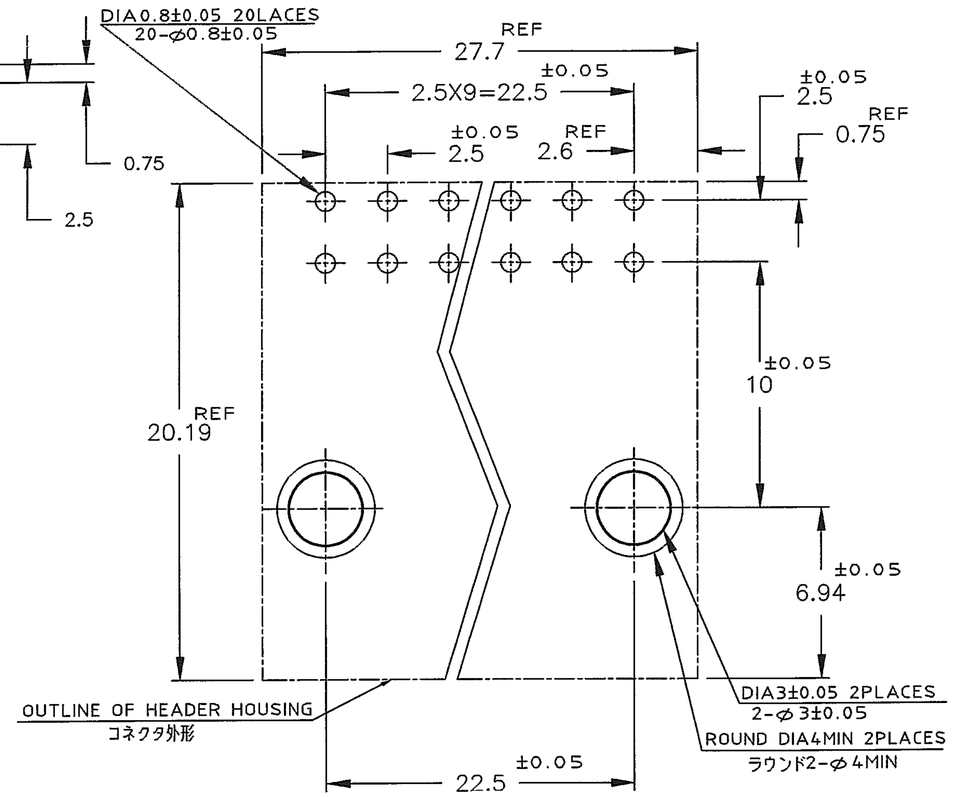

推奨基板取付け穴寸法 (公差: ±0.05)
PC 基板厚:1.6±0.3
(コネクタ搭載面)
RECOMENDED PC BOARD HOLE PATTERN(TOL:±0.05)
PC BOARD THICKNESS:1.6± 0.3
注記 (CONNECTOR MOUNT SIDE)

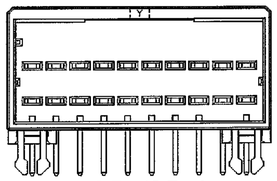

1376137-2
(KEYING Y)
SCALE : 2-1

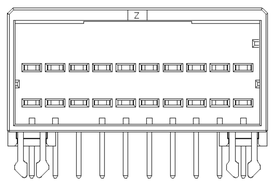

1376137-3
(KEYING Z)
SCALE : 2-1

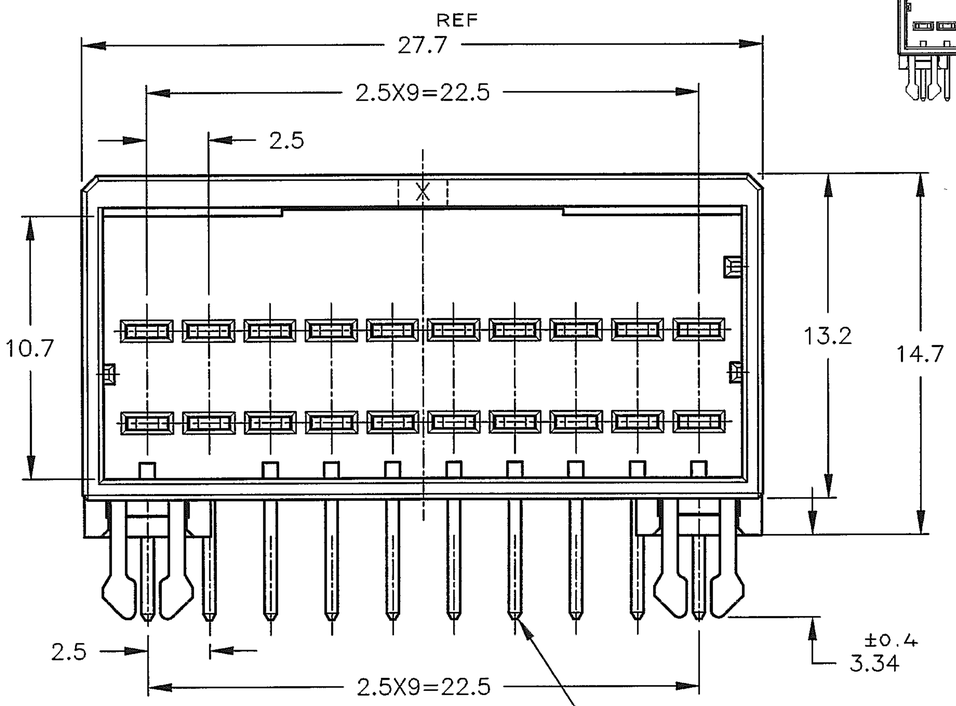

1376137-1
(KEYING X)

NOTES
1. MATERIAL:HOUSING:GLASS FILED THERMO PLASTIC ,POLYESTER(94V-0),COLOR:BLACK
TAB CONTACT:COPPER ALLOY
RETENTION LEG:BRASS
2. FINISH(CONTACT AREA):0.38μmMIN GOLD PLATING OVER Ni PLATING
3. FINISH(RETENTION LEG): TIN PLATED (CONTACT TAIL) OVER NICKEL

注記
1. 材料: ハウジング: ガラス入り熱可塑性
ポリエステル樹脂 (94V-0),色: 黒
タブ コンタクト:銅合金
リテンション レグ:黄銅
2. めっき: コンタクト: 全面Ni下地
接触部:0.38μm MIN金めっき
3. めっき: リテンションレグとコンタクト半田付部
: ニッケル下地の上にスズめっき

DIMENSIONS: 単位 特: mm	TOLERANCES UNLESS OTHERWISE SPECIFIED 一般公差 10 : ±0.3; 30 >10 : ±0.35; 100 >30 : ±0.4; ANGLE : ±3°	DWN K.IKEDA 24/FEB/'00	TE Connectivity
		CHK Y.KATO 28/FEB/'00	NAME 名称: 2列 ヘッダーアセンブリー 20P (水平タイプ) DOUBLE ROW HEADER ASS'Y 20P ("H"TYPE) <DYNAMIC D-2100D>
		APVD I.HASEGAWA 28/FEB/'00	
		PRODUCT SPEC 製品規格: 108-5619	
		APPLICATION SPEC 取付適用規格: 114-5258	
MATERIAL 材料: 注記参照 SEE NOTES	FINISH 仕上: 注記参照 SEE NOTES	WEIGHT: T1	SIZE A3 / CAGE CODE 00779 / DRAWING NO 番号: C-1376137 / RESTRICTED TO: –
		CUSTOMER DRAWING	SCALE 尺度 4-1 / SHEET 1 OF 1 / REV C

(CUSTOMER DRAWING) 顧客用図面

X-ON Electronics

Largest Supplier of Electrical and Electronic Components

Click to view similar products for Headers & Wire Housings ***category:***

Click to view products by TE Connectivity ***manufacturer:***

Other Similar products are found below :

892-18-020-10-001101 58102-G61-06LF 582553-1 0009485154 009176003701906 0050291907 LY20-4P-DT1-P1E-BR 02.125.8002.8 609-3404 61062-3 61082-181009 622-3653LF 63453-116 636-1030 636-1427 636-3427 636-4007 641938-9 641991-4 644827-2 65817-010LF 65817-015LF 65863-015LF 66207-023LF 67095-007LF 67601157 68645-018 68648-049 70.362.1628.0 70-4210 70-4226B 70-4853B 707-5020 707-5028 71.350.2428.0 71918-208LF 71961-016LF 733-134 733-162 754199-000 760-3052 787-8014-00 79531-3000 FCN-360C032-B FCN-367T-T012/H FCN-723D010/2 80.063.4001.1 800-90-001-10-001000 800-90-010-10-002000 801-43-002-10-013000