THIS DRAWING IS UNPUBLISHED. RELEASED FOR PUBLICATION -,- .
© COPYRIGHT - By - ALL RIGHTS RESERVED.

REVISIONS

P	LTR	DESCRIPTION	DATE	DWN	APVD
	C3	REVISED PER ECR-21-101026	23MAR2021	SK	DZ

NO.	NAME	MATERIAL
②	HEADER HOSING	6/6 NYLON GRASS FILLED/ NYLON 6
①	TAB	COPPER ALLOY TIN PLATED

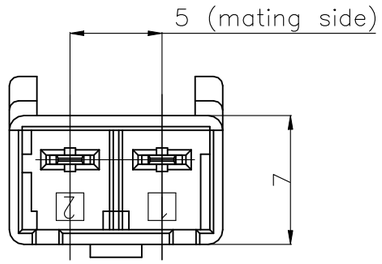

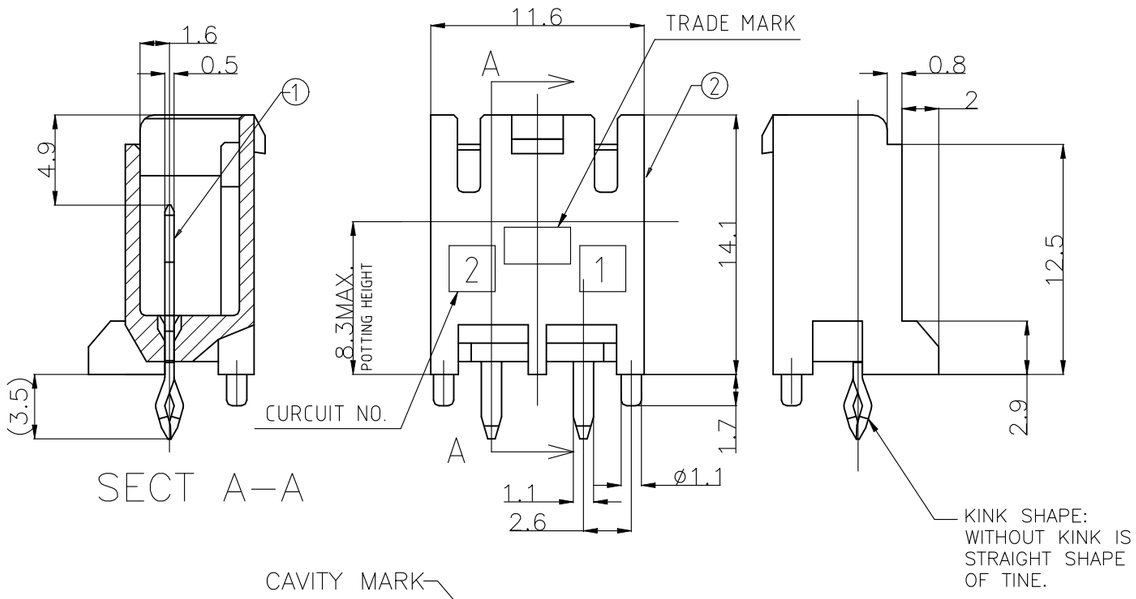

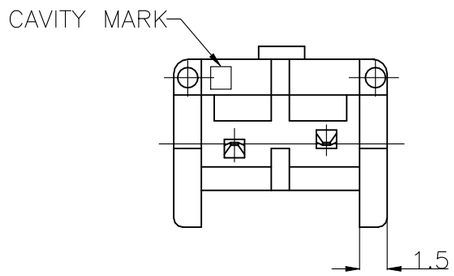

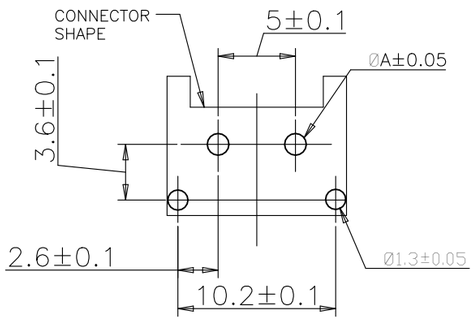

PUNCHING	1.25
DRILLING	1.4
	DIM A

1 PRINTED CIRCUIT BOARD RECOMMENDED HOLES

1 RECOMMENDED P.C.B LAY OUT.

2 APPLICABLE P.C.B. THICKNESS:1.6.

3 MATING CONN. P/N
PLUG HOUSING :SEE TABLE.

4 PARTS COMPLY WITH GLOW WIRE REQUIREMENT FOR PARTS OF NON-METALLIC MATERIAL SUPPORTING A CURRENT-CARRYING CONNNECTION DETAILED IN IEC 60335-1, SECTION 30(GWT).

5 NYLON 6, GWT, V-2.

6 NYLON 66, GWT, V-0.

7 PRELIMINARY-HIGH CURRENT RATING VERSION.

THE TYPE OF KEYING

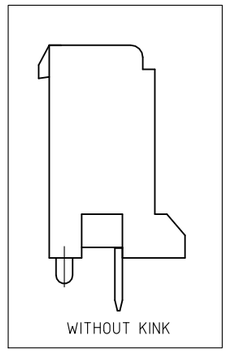

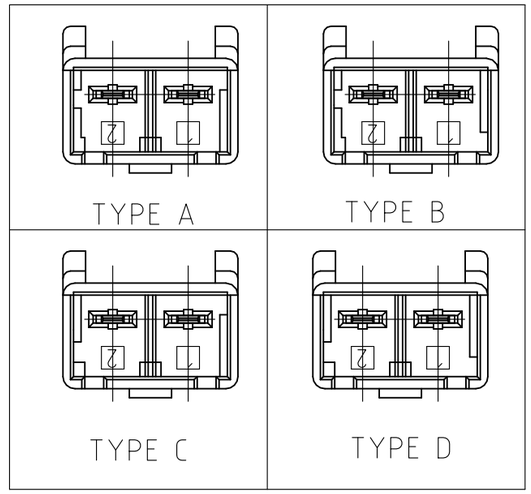

	MATING CONN. P/N 3	KINK EXISTENCE WITH/WITHOUT KINK	TYPE OF KEYING	COLOR	POS	PART NO.
7 6	1376388-1	WITH KINK	TYPE A	NATURAL	2POS	1376382-6
5	1376388-5	WITH KINK	TYPE A	NATURAL	2POS	1376382-5
6	3-1376388-4	WITHOUT KINK	TYPE D	YELLOW	2POS	8-1376382-4
6	2-1376388-3	WITHOUT KINK	TYPE C	BLUE	2POS	7-1376382-3
6	1-1376388-2	WITHOUT KINK	TYPE B	RED	2POS	6-1376382-2
6	1376388-1	WITHOUT KINK	TYPE A	NATURAL	2POS	5-1376382-1
6	3-1376388-4	WITH KINK	TYPE D	YELLOW	2POS	3-1376382-4
6	2-1376388-3	WITH KINK	TYPE C	BLUE	2POS	2-1376382-3
6	1-1376388-2	WITH KINK	TYPE B	RED	2POS	1-1376382-2
6	1376388-1	WITH KINK	TYPE A	NATURAL	2POS	1376382-1

WIRE RANGE	INSULATION DIA
—	—

THIS DRAWING IS A CONTROLLED DOCUMENT.

DIMENSIONS: MM

TOLERANCES UNLESS OTHERWISE SPECIFIED:
0 PLC ± 0.2
1 PLC ±
2 PLC ±
3 PLC ±
4 PLC ±
ANGLES ± 1°

MATERIAL: SEE TABLE

FINISH: SEE TABLE

DWN A.OISHI 28AUG'00
CHK Y.KASHIWA 28AUG'00
APVD Y.KASHIWA 28AUG'00
PRODUCT SPEC 108-5699
APPLICATION SPEC 114-5292
WEIGHT

TE Connectivity

NAME: 5.0 POWER KEY CONNECTOR 2P HEADER ASSEMBLY

SIZE	CAGE CODE	DRAWING NO	RESTRICTED TO
A3	00779	C-1376382	—

CUSTOMER DRAWING | SCALE 3:1 | SHEET 1 OF 2 | REV C3

1470-19 (1/15)

THIS DRAWING IS UNPUBLISHED. RELEASED FOR PUBLICATION -,- .
© COPYRIGHT - By - ALL RIGHTS RESERVED.

REVISIONS

P	LTR	DESCRIPTION	DATE	DWN	APVD
	—	SEE SHEET 1	—	—	—

NO.	NAME	MATERIAL
2	HEADER HOSING	6/6 NYLON
1	TAB	COPPER ALLOY TIN PLATED

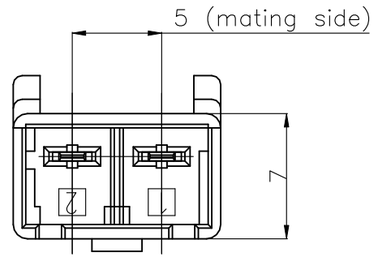

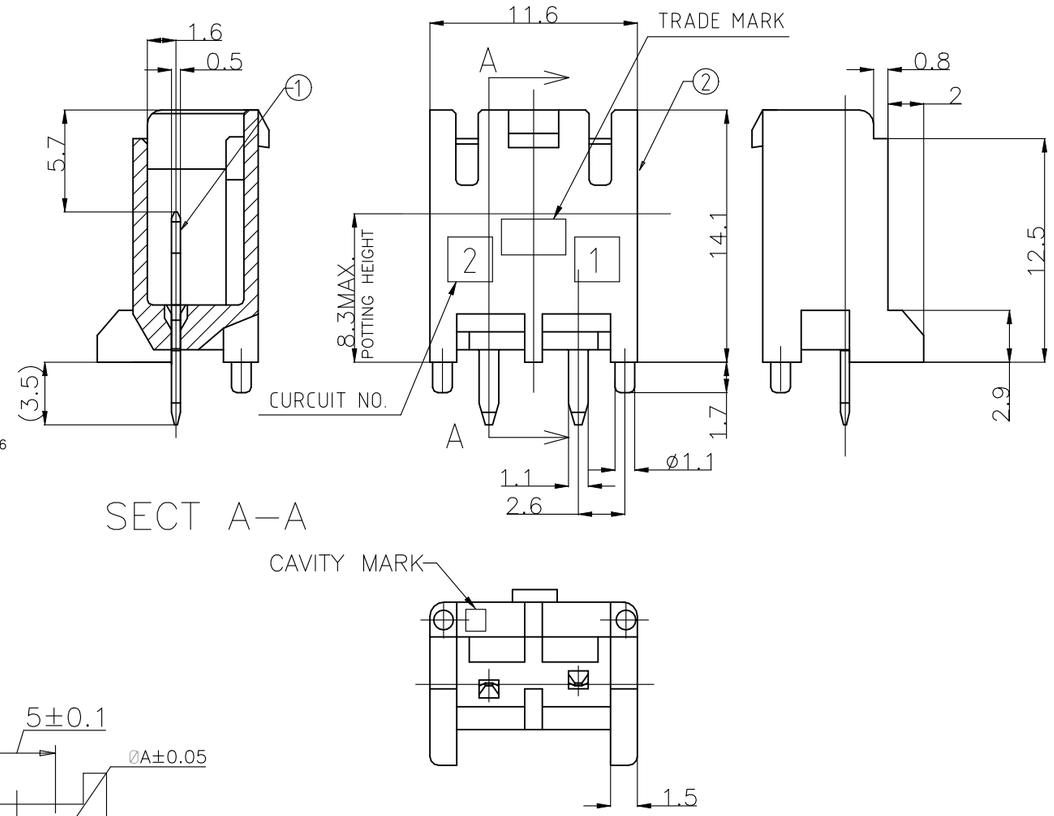

SECT A–A

1 RECOMMENDED P.C.B LAY OUT
2 APPLICABLE P.C.B. THICKNESS:1.6
3 MATING CONN. P/N
PLUG HOUSING :SEE TABLE

THE TYPE OF KEYING

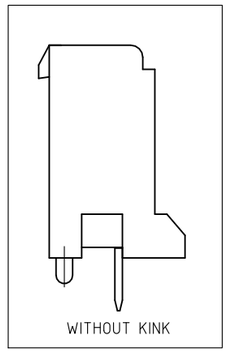

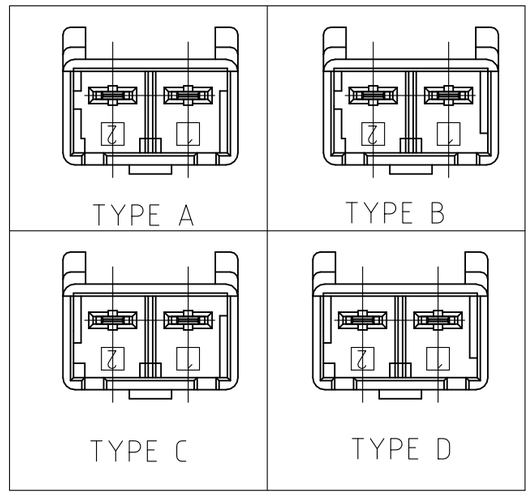

MATING CONN. P/N 3	WITH/WITHOUT KINK	TYPE OF KEYING	COLOR	POS	PART NO.
3–1376388–5	WITHOUT KINK	TYPE D	YELLOW	2POS	3–1376382–5
2–1376388–4	WITHOUT KINK	TYPE C	BLUE	2POS	2–1376382–4
1–1376388–3	WITHOUT KINK	TYPE B	RED	2POS	1–1376382–3
1376388–2	WITHOUT KINK	TYPE A	NATURAL	2POS	1376382–2

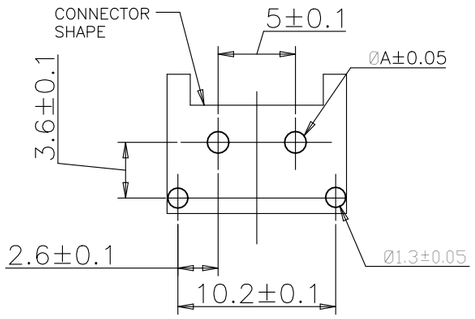

PUNCHING	1.25
DRILLING	1.4
	DIM A

1 PRINTED CIRCUIT BOARD RECOMMENDED HOLES

THIS DRAWING IS A CONTROLLED DOCUMENT.

DIMENSIONS: MM

TOLERANCES UNLESS OTHERWISE SPECIFIED:
0 PLC ± 0.2
1 PLC ±
2 PLC ±
3 PLC ±
4 PLC ±
ANGLES ± 1°

MATERIAL: SEE TABLE
FINISH: SEE TABLE

DWN A.OISHI 28AUG'00
CHK Y.KASHIWA 28AUG'00
APVD Y.KASHIWA 28AUG'00
PRODUCT SPEC 108–78863
APPLICATION SPEC 114–5292
WEIGHT —

WIRE RANGE —
INSULATION DIA —

TE Connectivity

NAME: 5.0 POWER KEY CONNECTOR 2P HEADER ASSEMBLY

SIZE A3 | CAGE CODE 00779 | DRAWING NO C–1376382 | RESTRICTED TO —

CUSTOMER DRAWING | SCALE 3:1 | SHEET 2 OF 2 | REV C3

X-ON Electronics

Largest Supplier of Electrical and Electronic Components

Click to view similar products for Headers & Wire Housings ***category:***

Click to view products by TE Connectivity ***manufacturer:***

Other Similar products are found below :

892-18-020-10-001101 58102-G61-06LF 582553-1 0009485154 009176003701906 0050291907 LY20-4P-DT1-P1E-BR 02.125.8002.8 609-3404 61062-3 61082-181009 622-3653LF 63453-116 636-1030 636-1427 636-3427 636-4007 641938-9 641991-4 644827-2 65817-010LF 65817-015LF 65863-015LF 66207-023LF 67095-007LF 67601157 68645-018 68648-049 70.362.1628.0 70-4210 70-4226B 70-4853B 707-5020 707-5028 71.350.2428.0 71918-208LF 71961-016LF 733-134 733-162 754199-000 760-3052 787-8014-00 79531-3000 FCN-360C032-B FCN-367T-T012/H FCN-723D010/2 80.063.4001.1 800-90-001-10-001000 800-90-010-10-002000 801-43-002-10-013000