© 2020 TE Connectivity. All Rights Reserved.

TE NO.	POSN	A	B	C	D	E	F	COLOR	
1456315-1	24	7.50	12.00	9.00	9.00	39.2	35,5	BLACK	
1456315-2	24	7.50	11.00	11.00	9.00	39.2	35,5	BLACK	
1456315-3	24	7.50	11.00	11.00	12.00	39.2	35,5	GREY	
1456315-4	24	9.00	11.00	11.00	9.00	39.2	35,5	GREY	
1456315-5	32	12.00	12.00	12.00	9.00	49.2	45.5	BLACK	
1456315-6	32	12.00	12.00	12.00	9.00	49.2	45.5	BLACK	
1456315-7	24	7.50	11.00	11.00	12.00	39.2	35,5	GREY	
1456315-8	24	9.00	11.00	11.00	9.00	39.2	35,5	GREY	
1456315-9	24	7.50	11.00	11.00	12.00	39.2	35,5	GREY	
~~1-1456315-0~~	~~24~~	~~7.50~~	~~11.00~~	~~11.00~~	~~12.00~~	~~39.2~~	~~35,5~~	~~GREY~~	OBSOLETE
1-1456315-1	24	9.00	11.00	11.00	9.00	39.2	35,5	GREY	
1-1456315-2	24	9.00	11.00	11.00	9.00	39.2	35,5	GREY	
1-1456315-3	24	7.50	12.00	9.00	9.00	39.2	35,5	BLACK	
1-1456315-4	24	7.50	11.00	11.00	9.00	39.2	35,5	BLACK	
1-1456315-5	24	7.50	11.00	11.00	12.00	39.2	35,5	GREY	
1-1456315-6	24	9.00	11.00	11.00	9.00	39.2	35,5	GREY	
1-1456315-7	24	9.00	11.00	11.00	9.00	39.2	35,5	GREY	
1-1456315-8	24	7.50	11.00	11.00	12.00	39.2	35,5	GREY	
~~1-1456315-9~~	~~24~~	~~9.00~~	~~11.00~~	~~11.00~~	~~9.00~~	~~39.2~~	~~35,5~~	~~GREY~~	OBSOLETE
2-1456315-0	32	12.00	12.00	12.00	9.00	49.2	45.5	BLACK	

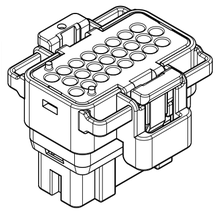

24 POSITION ASSY
SCALE 1.000

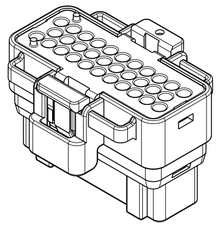

32 POSITION ASSY
SCALE 1.000

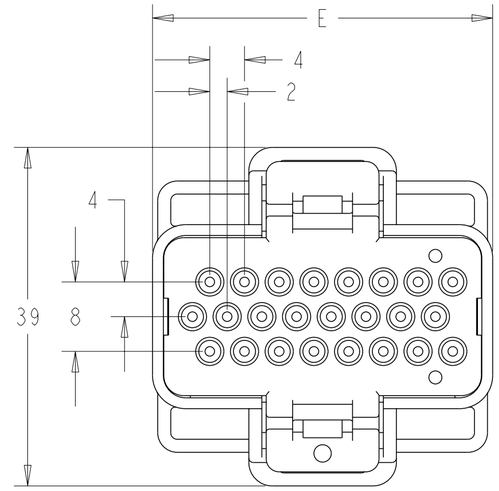

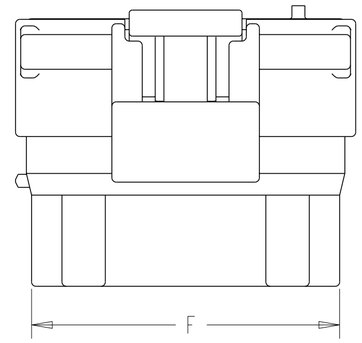

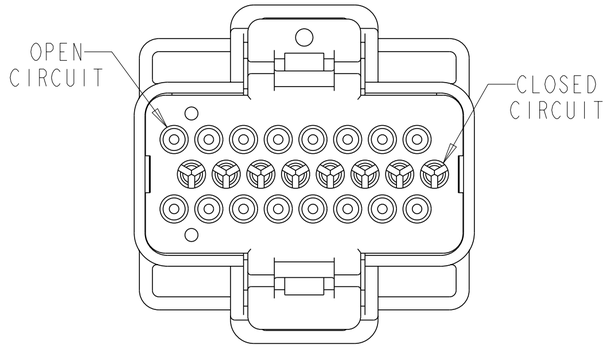

1456315-1 DISPLAYED

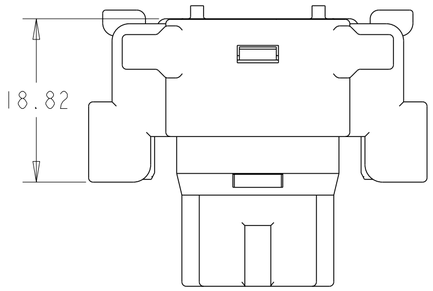

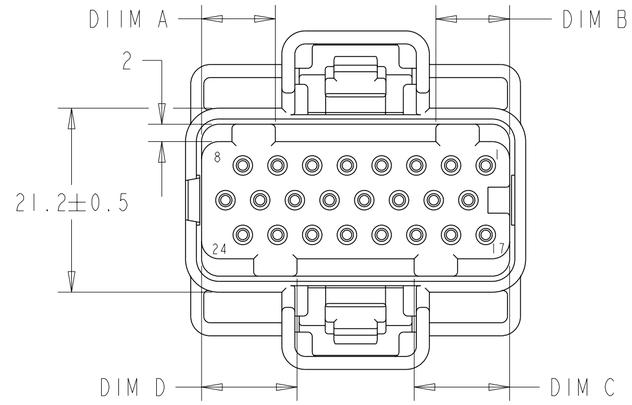

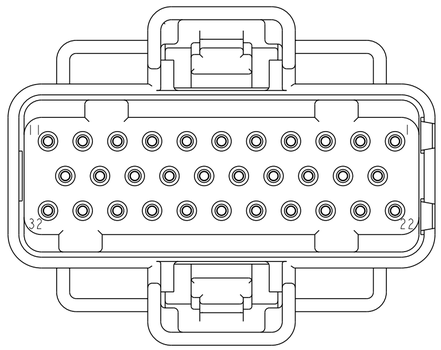

Part Number	SIZE	1	2	3	4	5	6	7	8	9	10	11	12	13	14	15	16	17	18	19	20	21	22	23	24	25	26	27	28	29	30	31	32	
		Complexity Matrix Position Number																								Not Applicable X / Closed Position O								
1456315-1	24									O	O	O	O	O	O	O	O									X	X	X	X	X	X	X	X	
1456315-2	24									O	O	O	O	O	O	O	O									X	X	X	X	X	X	X	X	
1456315-3	24			O	O	O								O		O	O						O	O		X	X	X	X	X	X	X	X	
1456315-4	24		O		O	O					O	O				O	O	O	O		O	O	O	O		X	X	X	X	X	X	X	X	
1456315-5	32						O			O		O	O	O	O	O	O	O	O	O	O	O												
1456315-6	32						O					O	O	O	O	O	O	O	O	O	O	O							O	O				
1456315-7	24			O	O	O								O									O	O		X	X	X	X	X	X	X	X	
1456315-8	24		O		O	O						O				O	O	O	O		O	O	O	O		X	X	X	X	X	X	X	X	
1456315-9	24			O	O	O								O								O	O	O		X	X	X	X	X	X	X	X	
~~1-1456315-0~~	~~24~~			~~O~~	~~O~~	~~O~~								~~O~~				~~O~~				~~O~~	~~O~~	~~O~~		X	X	X	X	X	X	X	X	OBSOLETE
1-1456315-1	24		O		O	O					O					O		O		O	O	O	O	O		X	X	X	X	X	X	X	X	
1-1456315-2	24		O		O	O					O	O				O	O	O	O	O	O	O	O	O		X	X	X	X	X	X	X	X	
1-1456315-3	24				O			O		O	O	O	O	O	O	O	O					O	O			X	X	X	X	X	X	X	X	
1-1456315-4	24			O				O		O	O	O	O	O	O	O	O							O	O	X	X	X	X	X	X	X	X	
1-1456315-5	24			O	O	O								O									O	O		X	X	X	X	X	X	X	X	
1-1456315-6	24		O		O	O		O		O		O				O	O	O	O	O	O	O	O	O		X	X	X	X	X	X	X	X	
1-1456315-7	24		O		O	O				O	O	O				O	O	O	O	O	O	O	O	O		X	X	X	X	X	X	X	X	
1-1456315-8	24			O	O	O																	O			X	X	X	X	X	X	X	X	
~~1-1456315-9~~	~~24~~				~~O~~	~~O~~		~~O~~	~~O~~	~~O~~	~~O~~					~~O~~	~~O~~	~~O~~		~~O~~	~~O~~	~~O~~	~~O~~	~~O~~		X	X	X	X	X	X	X	X	OBSOLETE
2-1456315-0	32						O			O		O	O	O	O	O	O	O	O	O	O	O											O	

Recomended Terminal	
TE P/N	AWG
0-1437284-9	20-18
1-1437284-0	16

THIS DRAWING IS A CONTROLLED DOCUMENT.

DIMENSIONS: mm

TOLERANCES UNLESS OTHERWISE SPECIFIED:
0 PLC ±1.0
1 PLC ±0.3
2 PLC ±0.15
3 PLC ±0.070
4 PLC ±0.050
ANGLES ±2°

MATERIAL: - material_2
FINISH: - finish_spec_2

DWN 08JUN2001 R. HARDISON
CHK 08JUN2001 R. HARDISON
APVD 08JUN2001 R. HARDISON
PRODUCT SPEC -
APPLICATION SPEC -
WEIGHT -

TE Connectivity

NAME: SOCKET ASSY, FOR 1.0mm MIP CONN SYS SELECTIVELY LOADED STRAIN RELIEF SIEMENS AUTOMOTIVE

SIZE A2 | CAGE CODE 00779 | DRAWING NO C-1456315 | RESTRICTED TO

CUSTOMER DRAWING | SCALE 2.000 | SHEET 1 OF 1 | REV G1

1471-9 (3/13)

REVISIONS

P	LTR	DESCRIPTION	DATE	DWN	APVD
	F1	REVISED PER ECR-08-006840	17MAR2008	JM	JM
	G	REV PER ECO-10-022111 6	29OCT2010	DD	DR
	G1	REVISED PER ECO-20-012739	29SEP2020	AP	GK

X-ON Electronics

Largest Supplier of Electrical and Electronic Components

Click to view similar products for Automotive Connectors ***category:***

Click to view products by TE Connectivity ***manufacturer:***

Other Similar products are found below :

003-018-000 60403001 60993906-B M902-2131 M902-2161 72.330.1035.1 73.353.4028.0 F119300-B F166900 F258300-B F358300-B F407400 F444110 F487000 F509500B-B 827153-1 8N1515-32-24P 9-1326729-8 925474-1 928905-1 964562-4 968782-1 GT17SA-8DS-HU 98891-1012 98947-1016 12004147 12004475-L 12010290 12010309-B 12015454 12020219-B 12020308 12041318-B 12052225-L 12052466 12059125 12064869 12004327-B 12010503-B 12015308 12015384 12015909 1-21030-1 12041254 12041318 12047946-B 12047957 12047957-L 12059473 12066261