THIS DRAWING IS UNPUBLISHED. RELEASED FOR PUBLICATION -,- .
© COPYRIGHT 2011 BY TYCO ELECTRONICS CORPORATION. ALL RIGHTS RESERVED.

LOC	DIST
DW	—

REVISIONS

P	LTR	DESCRIPTION	DATE	DWN	APVD
	H	REVISED (ECR-13-000307)	20MAY'13	E.L.	W.K.

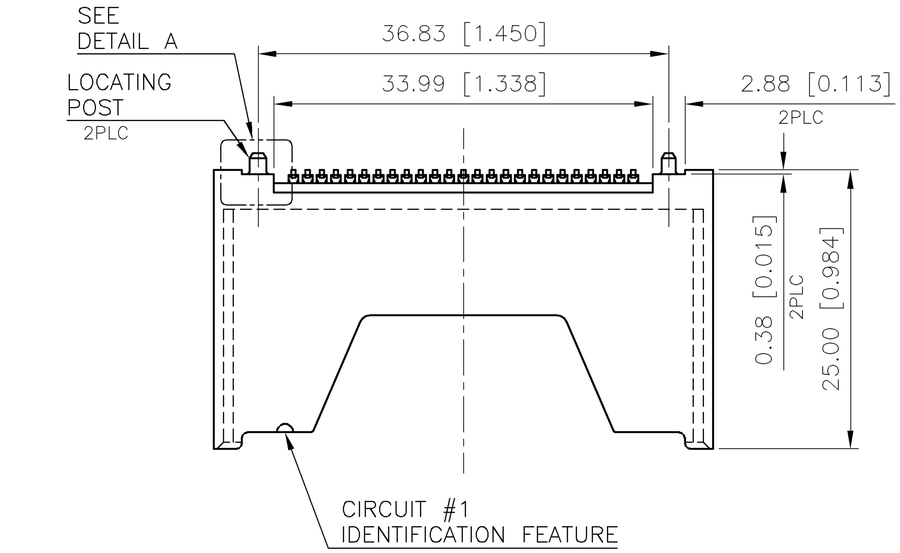

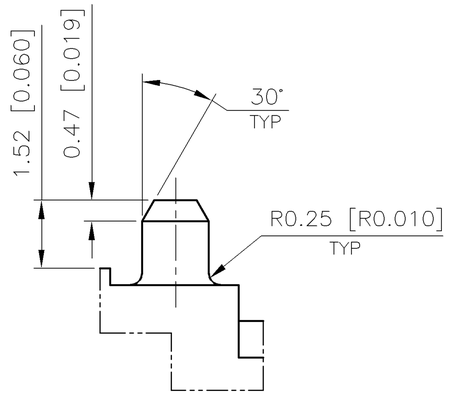

DETAIL A
SCALE 4:1

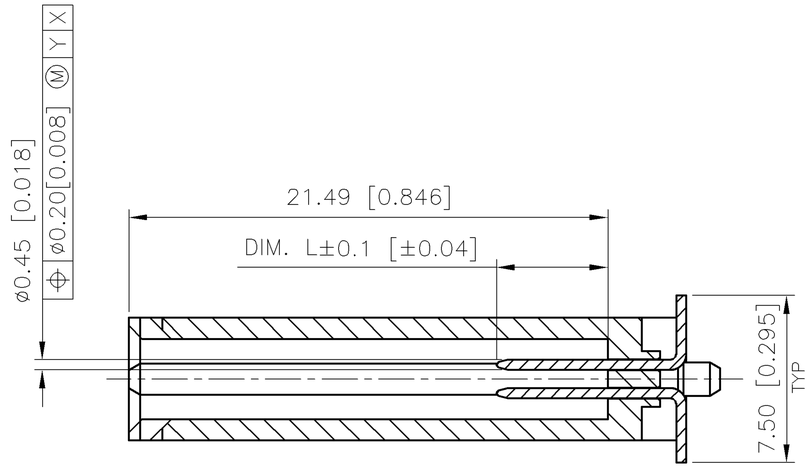

B–B
SCALE 2:1

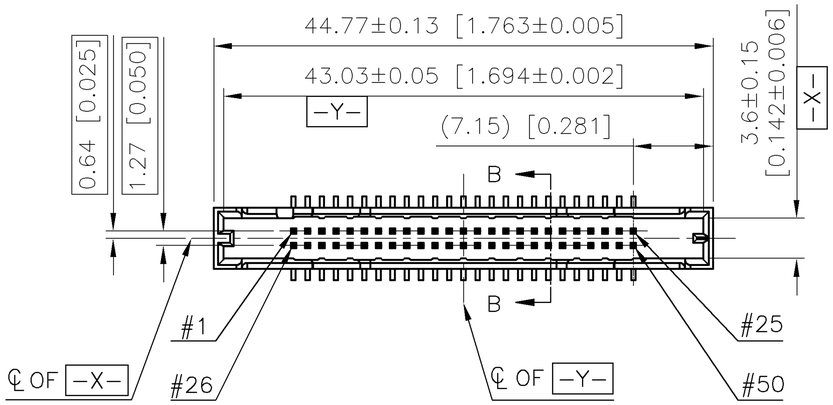

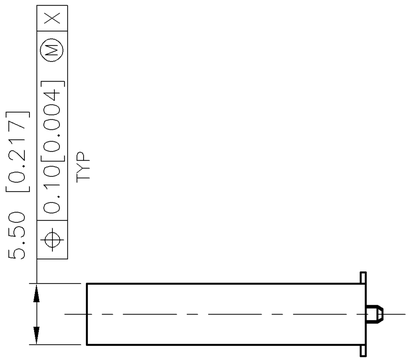

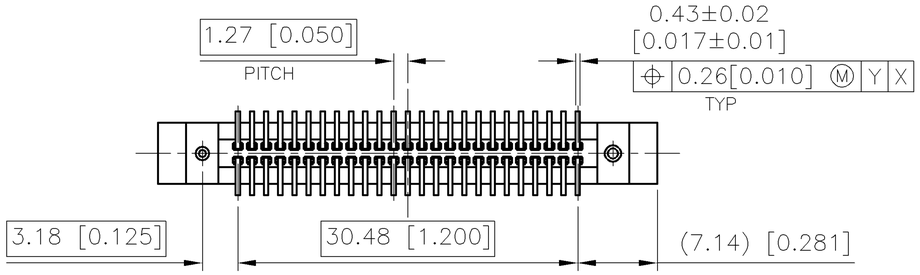

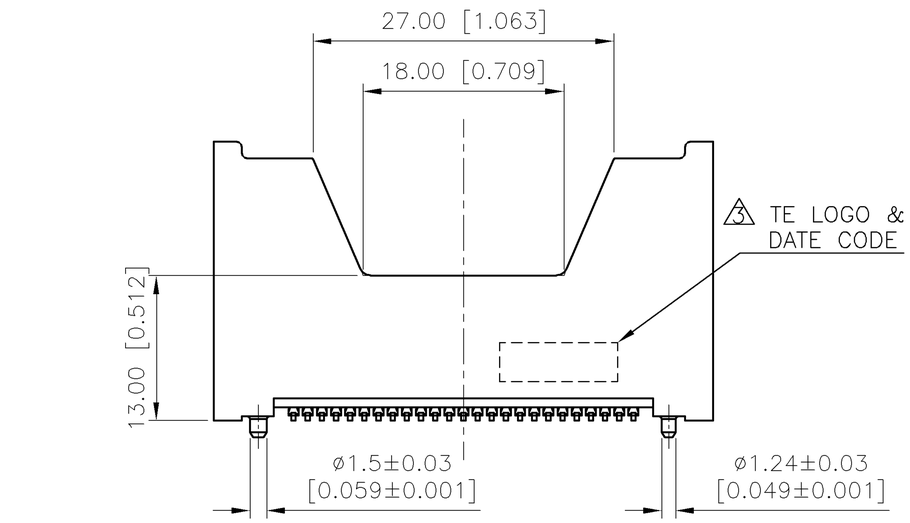

SUPERSEDE 146540-1 WITH 146540-2					
	B	ACTIVE	1, 13 38, 50	ALL OTHER PINS	25, 26	146540-2
	A					146540-1
FINISH	PART STATUS	5.00 [0.197]	4.25 [0.167]	3.50 [0.138]	ASSEMBLY PATR NUMBER
		"L"PIN LENGTH & CAVITY LOCAION			

THIS DRAWING IS A CONTROLLED DOCUMENT.

DIMENSIONS: mm

TOLERANCES UNLESS OTHERWISE SPECIFIED:

0 PLC	± –
1 PLC	± 0.3
2 PLC	± 0.2
3 PLC	± 0.15
4 PLC	± –
ANGLES	± 3°

MATERIAL: SEE NOTE

FINISH: SEE NOTE

DWN J. BURWELL 27JUN1996
CHK K. KREIDLER 18AUG2003
APVD —
PRODUCT SPEC 108-57134
APPLICATION SPEC —
WEIGHT 3.79 GRAMS

TE Connectivity

NAME
PIN HEADER ASSEMBLY
VERTICAL, 50 POS, SURFACE MOUNT
AMP COMPACT FLASH

SIZE	CAGE CODE	DRAWING NO	RESTRICTED TO
A3	00779	C-146540	—

CUSTOMER DRAWING | SCALE — | SHEET 1 OF 3 | REV H

THIS DRAWING IS UNPUBLISHED. RELEASED FOR PUBLICATION -,- .
© COPYRIGHT 2011 BY TYCO ELECTRONICS CORPORATION. ALL RIGHTS RESERVED.

LOC	DIST
DW	—

REVISIONS

P	LTR	DESCRIPTION	DATE	DWN	APVD
		SEE SHEET 1.			

NOTE:

1. MATERIAL:
   HOUSING: LCP WITH 30% GF, UL 94 V-0, BLACK COLOR.
   CONTACTS: BRASS.
2. FINISH:
   CONTACTS: (A) 0.381um [15u"] MIN. GOLD PLATED ON CONTACT AREA.
   3.81um [150u"] MIN. TIN-LEAD ON SOLDER TAIL.
   1.27um [50u"] MIN. NICKEL UNDERPLATED OVERALL.
   (B) 0.381um [15u"] MIN GOLD ON CONTACT AREA.
   OR 0.0508um [2u"] MIN GOLD OVER 0.254um [10u"]
   PALLADIUM NICKEL ON CONTACT AREA.
   3.81um [150u"] MIN 100% MATTE-TIN ON SOLDER TAILS.
   1.27um [50u"] MIN NICKEL UNDERPLATED OVERALL.
3. COPMANY LOGO IN APPROXIMATE AREA SHOWN.
4. REFLOW SOLDER CAPABLE TO 260°C PER TE TEST SPEC. 109-201, CONDITION B.
5. DAUMS AND BASIC DIMENSIONS ESTABLISHED BY CUSTOMER.

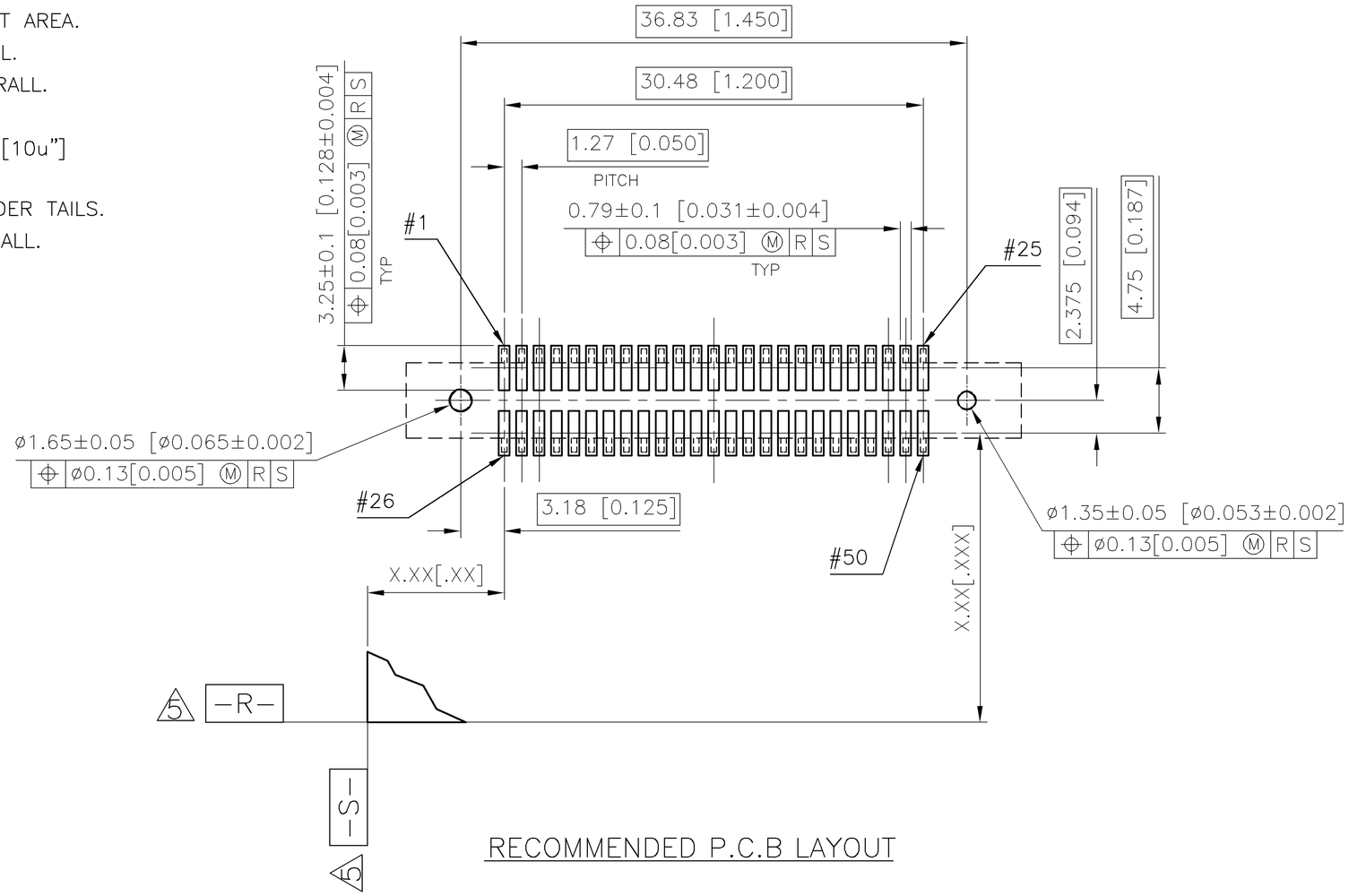

RECOMMENDED P.C.B LAYOUT

THIS DRAWING IS A CONTROLLED DOCUMENT.

DIMENSIONS: mm

TOLERANCES UNLESS OTHERWISE SPECIFIED:

0 PLC	± –
1 PLC	± 0.3
2 PLC	± 0.2
3 PLC	± 0.15
4 PLC	± –
ANGLES	± 3°

MATERIAL –

FINISH –

DWN –
CHK –
APVD –
PRODUCT SPEC –
APPLICATION SPEC –
WEIGHT –

CUSTOMER DRAWING

TE Connectivity

NAME
PIN HEADER ASSEMBLY
VERTICAL, 50 POS, SURFACE MOUNT
AMP COMPACT FLASH

SIZE	CAGE CODE	DRAWING NO	RESTRICTED TO
A3	00779	C-146540	—

SCALE — SHEET 2 OF 3 REV H

THIS DRAWING IS UNPUBLISHED. RELEASED FOR PUBLICATION -,- .
© COPYRIGHT 2011 BY TYCO ELECTRONICS CORPORATION. ALL RIGHTS RESERVED.

LOC	DIST
DW	—

REVISIONS

P	LTR	DESCRIPTION	DATE	DWN	APVD
		SEE SHEET 1.			

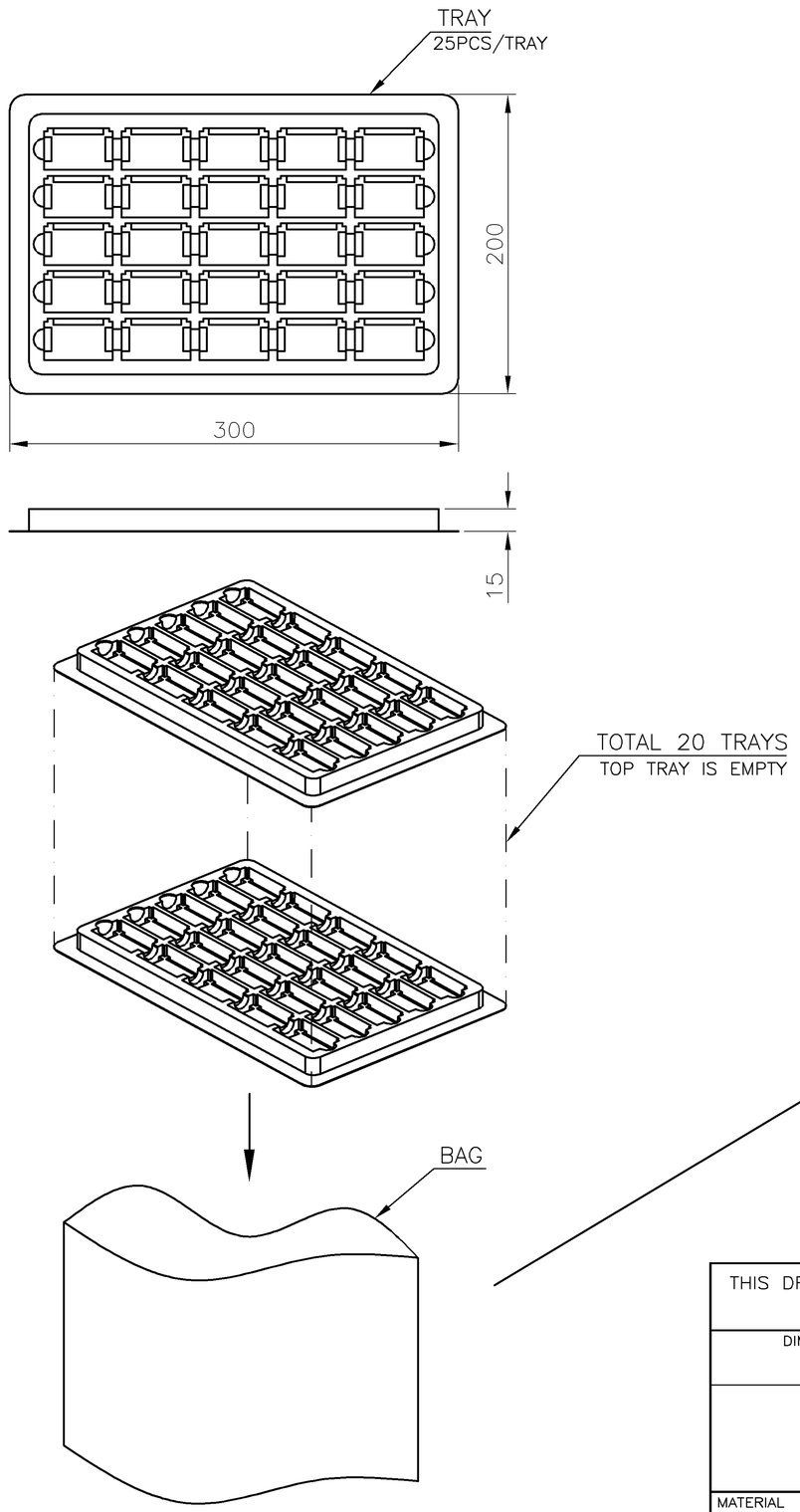

NOTES:

1. MATERIAL:
   TRAY: PS
   BAG: PE
   BOX: CORRUGATED FIBERBOARD.
2. DIMENSION:
   TRAY: L=300mm, W=200mm, H=15mm
   BAG: L=600mm, W=600mm, THICKNESS=0.1mm
   BOX: L=310mm, W=210mm, H=310mm
3. EACH BAG SHALL BE INCLUDED:
   * DESICCANT
3. QUANTITY: SEE TABLE
4. WEIGHT: SEE TABLE

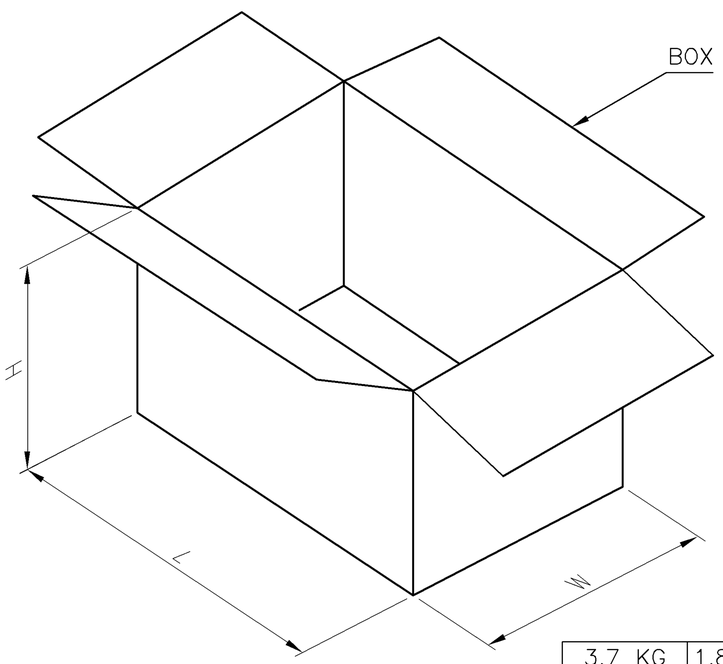

3.7 KG	1.89 KG	25	20	500
GROSS WEIGHT	NET WEIGHT	PCS/ TRAY	TRAY/ BOX	PCS/ BOX

THIS DRAWING IS A CONTROLLED DOCUMENT.

DIMENSIONS: mm

TOLERANCES UNLESS OTHERWISE SPECIFIED:

0 PLC	± –
1 PLC	± 0.3
2 PLC	± 0.2
3 PLC	± 0.15
4 PLC	± –
ANGLES	± 3°

MATERIAL: –

FINISH: –

DWN: –
CHK: –
APVD: –
PRODUCT SPEC: —
APPLICATION SPEC: —
WEIGHT: —

TE Connectivity

NAME: PIN HEADER ASSEMBLY VERTICAL, 50 POS, SURFACE MOUNT AMP COMPACT FLASH

SIZE	CAGE CODE	DRAWING NO	RESTRICTED TO
A3	00779	C-146540	—

CUSTOMER DRAWING | SCALE: — | SHEET 3 OF 3 | REV H

X-ON Electronics

Largest Supplier of Electrical and Electronic Components

Click to view similar products for Memory Card Connectors ***category:***

Click to view products by TE Connectivity ***manufacturer:***

Other Similar products are found below :

M21-033321-005 6407-249V-25273P 6407-249V-25343P 6426-201-21343 69.920.0553.0 FCN-568P068-G/07-4V 809180410000000 N7E50-7516PG-20-WF HMCAP001 252-0144-000 2041353-2 33CFAE-DN 502431-1011 617230001 NX1-32T-KT3K(05) 95622-003LF N7E50-U516RB-50-SIN0005 95079-00CALF 84648-056HLF 33DVIR-29S12R 125A-78C00 MI20A-50PD-SF-EJL(71) KP10S-SF-PEJ(812) 504536-0691 504580-0691 CCM03-3109 B LFT MI21-50PD-SF(91) 2309923-1 61126-050CAHLF IC1GA-68PD-1.27DS-EJ(72) GTFP08432B1HR G85DT17001P1EU G85B21611142HHR GSD090144HR G85D1140022P1HR GMCB05801124EU G85C11101152HHR G85B231021B1HR G85D1160022HHR XKSIM-114 123A-21M00 123A-30B00 123A-30A00 123A-21A00 123A-21B00 123A-21E00 123A-30E00 123A-30M00 123A-40A00 123A-40E00