THIS DRAWING IS UNPUBLISHED. RELEASED FOR PUBLICATION – , – .
© COPYRIGHT – BY – ALL RIGHTS RESERVED.

LOC	DIST
DW	—

REVISIONS

P	LTR	DESCRIPTION	DATE	DWN	APVD
	R	REVISED. (ECR–12–015329)	18FEB13	JC	SC

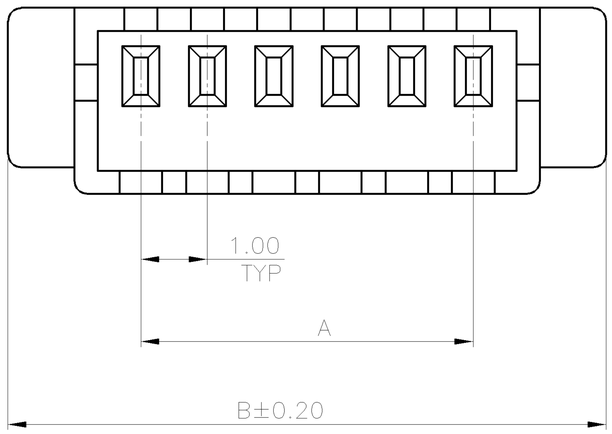

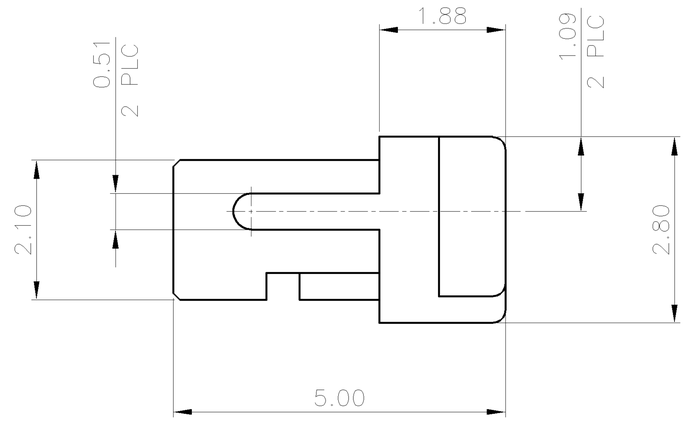

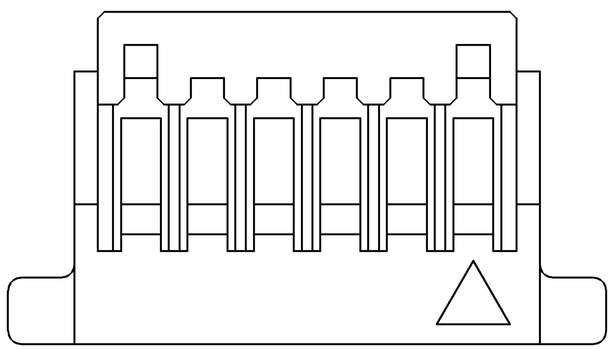

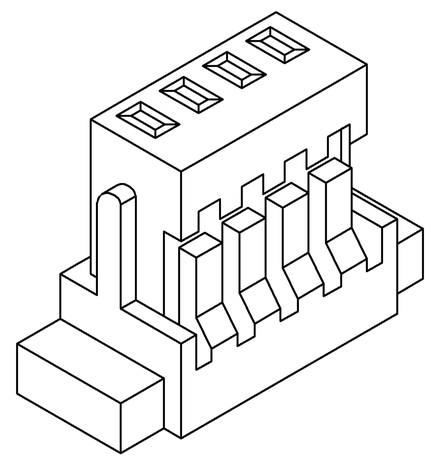

DIM. B	DIM. A	NO. OF CONTACTS	PART NUMBER
18.00	14.00	15	1–1470364–5
17.00	13.00	14	1–1470364–4
16.00	12.00	13	1–1470364–3
15.00	11.00	12	1–1470364–2
14.00	10.00	11	1–1470364–1
13.00	9.00	10	1–1470364–0
12.00	8.00	9	1470364–9
11.00	7.00	8	1470364–8
10.00	6.00	7	1470364–7
9.00	5.00	6	1470364–6
8.00	4.00	5	1470364–5
7.00	3.00	4	1470364–4
6.00	2.00	3	1470364–3
5.00	1.00	2	1470364–2

NOTE:

1. MATERIAL:
   HOUSING: THERMOPLASTIC UL 94V–0.
2. APPLY TERMINAL PART NUMBER: 1470365–X & 1734597–X.
3. PACKAGING: BAG.

THIS DRAWING IS A CONTROLLED DOCUMENT.

DIMENSIONS: MM

TOLERANCES UNLESS OTHERWISE SPECIFIED:

0 PLC	± –
1 PLC	± –
2 PLC	± 0.1
3 PLC	± –
4 PLC	± –
ANGLES	± –

MATERIAL: SEE NOTE

FINISH: SEE NOTE

DWN A. WU 22OCT2002
CHK J. CHENG 22OCT2002
APVD J. WU 22OCT2002

PRODUCT SPEC: 108–57264

APPLICATION SPEC: —

WEIGHT: SEE TABLE

CUSTOMER DRAWING

TE Connectivity

NAME: 1.0 MM PITCH WIRE TO BOARD CONNECTOR, RECEPTACLE, SMT, HOUSING

SIZE	CAGE CODE	DRAWING NO	RESTRICTED TO
A3	00779	C–1470364	—

SCALE: — SHEET 1 OF 2 REV R

THIS DRAWING IS UNPUBLISHED. RELEASED FOR PUBLICATION – , – .
© COPYRIGHT – BY – ALL RIGHTS RESERVED.

LOC	DIST
DW	—

REVISIONS

P	LTR	DESCRIPTION	DATE	DWN	APVD
	–	SEE SHEET 1.	–	–	–

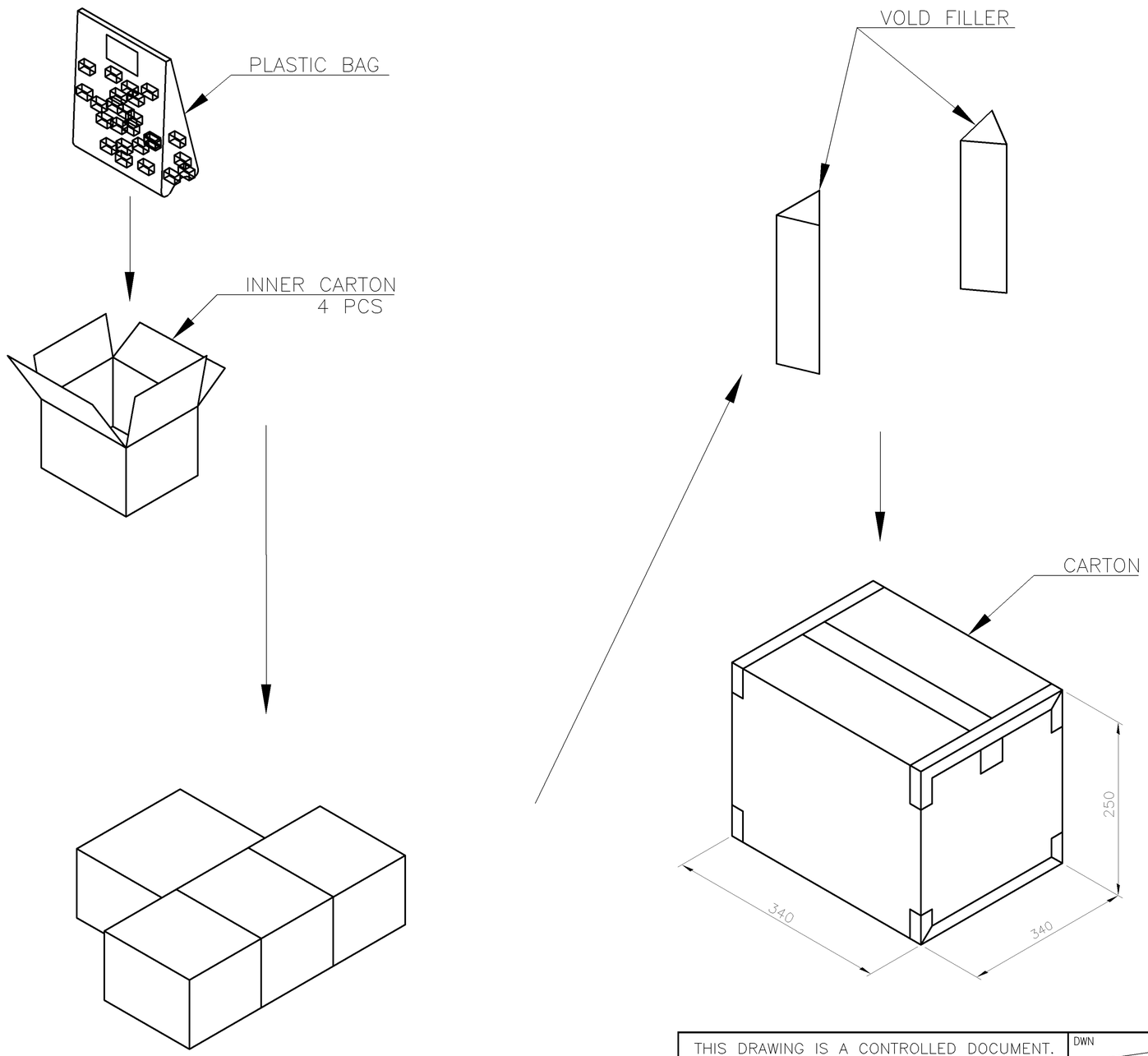

NO. OF CONTACTS	GROSS WEIGHT	NET WEIGHT	QUANTITY
15	4.70 KG	1.98 KG	16000 PCS
14	4.62 KG	1.87 KG	16000 PCS
13	4.53 KG	1.76 KG	16000 PCS
12	4.43 KG	1.65 KG	16000 PCS
11	5.14 KG	2.30 KG	24000 PCS
10	4.95 KG	2.14 KG	24000 PCS
9	4.76 KG	1.97 KG	24000 PCS
8	4.57 KG	1.80 KG	24000 PCS
7	4.38 KG	1.63 KG	24000 PCS
6	3.50 KG	1.95 KG	32000 PCS
5	3.26 KG	1.73 KG	32000 PCS
4	3.06 KG	1.50 KG	32000 PCS
3	2.82 KG	1.28 KG	32000 PCS
2	2.58 KG	1.06 KG	32000 PCS

THIS DRAWING IS A CONTROLLED DOCUMENT.

DIMENSIONS: MM

TOLERANCES UNLESS OTHERWISE SPECIFIED:
0 PLC ± –
1 PLC ± –
2 PLC ± –
3 PLC ± –
4 PLC ± –
ANGLES ± –

MATERIAL: SEE NOTE

FINISH: SEE NOTE

DWN
CHK
APVD
PRODUCT SPEC —
APPLICATION SPEC —
WEIGHT: SEE TABLE

TE Connectivity

NAME: 1.0 MM PITCH WIRE TO BOARD CONNECTOR, RECEPTACLE, SMT, HOUSING

SIZE	CAGE CODE	DRAWING NO	RESTRICTED TO
A3	00779	C-1470364	—

CUSTOMER DRAWING | SCALE — | SHEET 2 OF 2 | REV R

X-ON Electronics

Largest Supplier of Electrical and Electronic Components

Click to view similar products for Headers & Wire Housings ***category:***

Click to view products by TE Connectivity ***manufacturer:***

Other Similar products are found below :

892-18-020-10-001101 58102-G61-06LF 582553-1 0009485154 009176003701906 0050291907 LY20-4P-DT1-P1E-BR 02.125.8002.8 609-3404 61062-3 61082-181009 622-3653LF 63453-116 636-1030 636-1427 636-3427 636-4007 641938-9 641991-4 644827-2 65817-010LF 65817-015LF 65863-015LF 66207-023LF 67095-007LF 67601157 68645-018 68648-049 70.362.1628.0 70-4210 70-4226B 70-4853B 707-5020 707-5028 71.350.2428.0 71918-208LF 71961-016LF 733-134 733-162 754199-000 760-3052 79531-3000 FCN-360C032-B FCN-367T-T012/H FCN-723D010/2 80.063.4001.1 800-90-010-10-002000 801-43-002-10-013000 801-43-006-10-002000 801-93-011-10-001000