THIS DRAWING IS UNPUBLISHED. RELEASED FOR PUBLICATION -,- .
© COPYRIGHT - By - ALL RIGHTS RESERVED.

LOC	DIST
AD	00

REVISIONS

P	LTR	DESCRIPTION	DATE	DWN	APVD
	Y6	REVISED PER ECO-13-005565	02APR13	KH	JO

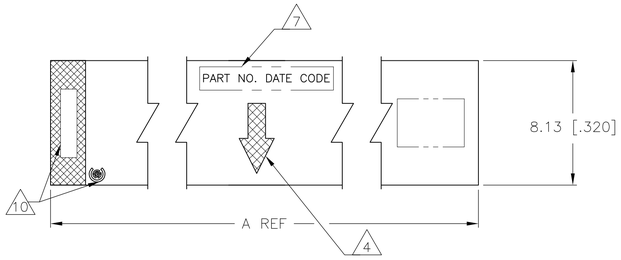

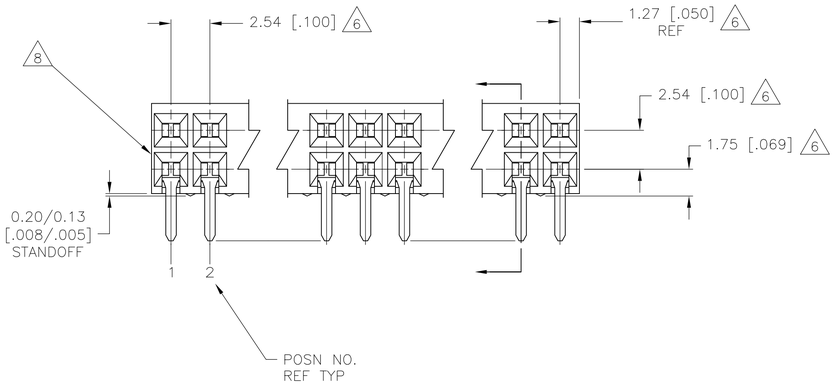

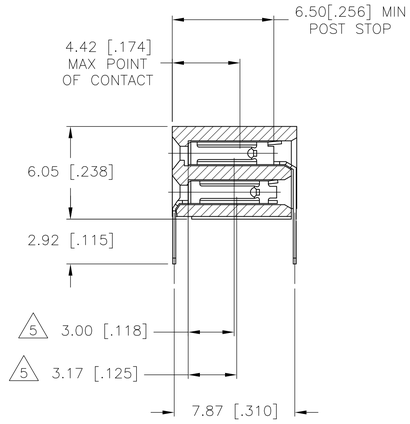

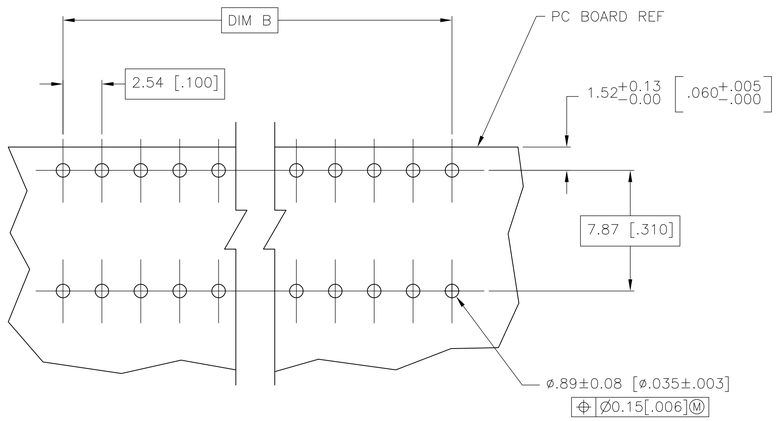

RECOMMENDED PC BOARD LAYOUT

1. HOUSING MATERIAL: GLASS FILLED POLYESTER, COLOR- BLACK
2. CONTACT MATERIAL: PHOSPHOR BRONZE
3. CONTACT FINISH: 0.00076[.000030] THK DUPLEX PLATED GOLD ON CONTACT AREA, 0.00127[.000050] MIN THK BRIGHT TIN-LEAD ON SOLDERLEADS, ALL OVER 0.00127[.000050] NICKEL
4. MOLDED IN ARROW DESIGNATES THE MATING FACE OF THE CONNECTOR
5. POINT OF MEASUREMENT FOR PLATING THICKNESS OF CONTACT AREA
6. DIMENSIONS PERTAIN TO HOUSING CAVITY CENTERLINES
7. PART NUMBER AND DATE CODE MARKED IN APPROXIMATE LOCATION SHOWN,EITHER END.
8. ALTERNATE LOCATION FOR DATE CODE FOR 4 AND 6 POSITION.
10. TE LOGO AND CSA LOGO ARE MOLDED INTO HOUSING, THIS LOCATION.

	B	A	NO. OF POSN	ASSEMBLY PART NUMBER
	10.16[.400]	12.70[.500]	10	6-535512-4
	7.62[.300]	10.16[.400]	8	6-535512-3
	5.08[.200]	7.62[.300]	6	8 6-535512-2
	2.54[.100]	5.08[.200]	4	8 6-535512-1
	162.56[6.400]	165.10[6.500]	130	6-535512-0
	160.02[6.300]	162.56[6.400]	128	5-535512-9
	157.48[6.200]	160.02[6.300]	126	5-535512-8
	152.40[6.000]	154.94[6.100]	122	5-535512-7
	149.86[5.900]	152.40[6.000]	120	5-535512-6
	147.32[5.800]	149.86[5.900]	118	5-535512-5
	144.78[5.700]	147.32[5.800]	116	5-535512-4
	142.24[5.600]	144.78[5.700]	114	5-535512-3
	139.70[5.500]	142.24[5.600]	112	5-535512-2
	137.16[5.400]	139.70[5.500]	110	5-535512-1
	134.62[5.300]	137.16[5.400]	108	5-535512-0
	132.08[5.200]	134.62[5.300]	106	4-535512-9
	129.54[5.100]	132.08[5.200]	104	4-535512-8
	127.00[5.000]	129.54[5.100]	102	4-535512-7
	124.46[4.900]	127.00[5.000]	100	4-535512-6
SUPERCEDED BY 4-5535512-5	121.92[4.800]	124.46[4.900]	98	4-535512-5
	119.38[4.700]	121.92[4.800]	96	4-535512-4
	116.84[4.600]	119.38[4.700]	94	4-535512-3
	114.30[4.500]	116.84[4.600]	92	4-535512-2
	111.76[4.400]	114.30[4.500]	90	4-535512-1
	109.22[4.300]	111.76[4.400]	88	4-535512-0
SUPERCEDED BY 3-5535512-9	106.68[4.200]	109.22[4.300]	86	3-535512-9
	104.14[4.100]	106.68[4.200]	84	3-535512-8
	101.16[4.000]	104.14[4.100]	82	3-535512-7
	91.44[3.600]	93.98[3.700]	74	3-535512-6
	88.90[3.500]	91.44[3.600]	72	3-535512-5
	83.82[3.300]	86.36[3.400]	68	3-535512-4
	81.28[3.200]	83.82[3.300]	66	3-535512-3
	78.74[3.100]	81.28[3.200]	64	3-535512-2
	76.20[3.000]	78.74[3.100]	62	3-535512-1
	73.66[2.900]	76.20[3.000]	60	3-535512-0
	71.12[2.800]	73.66[2.900]	58	2-535512-9
	63.50[2.500]	66.04[2.600]	52	2-535512-8
	55.88[2.200]	58.42[2.300]	46	2-535512-7
	50.8[2.000]	53.34[2.100]	42	2-535512-6
	48.26[1.900]	50.8[2.000]	40	2-535512-5
	45.72[1.800]	48.26[1.900]	38	2-535512-4
	38.10[1.500]	40.64[1.600]	32	2-535512-3
	35.56[1.400]	38.10[1.500]	30	2-535512-2
	33.02[1.300]	35.56[1.400]	28	2-535512-1
	30.48[1.200]	33.02[1.300]	26	2-535512-0
	25.40[1.000]	27.94[1.100]	22	1-535512-9
	17.78[.700]	20.32[.800]	16	1-535512-8
	15.24[.600]	17.78[.700]	14	1-535512-7
	20.32[.800]	22.86[.900]	18	1-535512-6
	58.42[2.300]	60.96[2.400]	48	1-535512-5
	154.94[6.100]	157.48[6.200]	124	1-535512-4
	99.06[3.900]	101.16[4.000]	80	1-535512-3
	96.52[3.800]	99.06[3.900]	78	1-535512-2
	93.98[3.700]	96.52[3.800]	76	1-535512-1
	86.36[3.400]	88.90[3.500]	70	1-535512-0
	68.58[2.700]	71.12[2.800]	56	535512-9
	66.04[2.600]	68.58[2.700]	54	535512-8
	60.96[2.400]	63.50[2.500]	50	535512-7
	53.34[2.100]	55.88[2.200]	44	535512-6
	43.18[1.700]	45.72[1.800]	36	535512-5
	40.64[1.600]	43.18[1.700]	34	535512-4
	27.94[1.100]	30.48[1.200]	24	535512-3
	22.86[.900]	25.40[1.000]	20	535512-2
	12.70[.500]	15.24[.600]	12	535512-1

THIS DRAWING IS A CONTROLLED DOCUMENT.

DIMENSIONS: mm

TOLERANCES UNLESS OTHERWISE SPECIFIED:
0 PLC ± -
1 PLC ± -
2 PLC ± -
3 PLC ± 0.13[.005]
4 PLC ± -
ANGLES ± -

MATERIAL 1 2
FINISH 3

DWN R BROWN 17MAY02
CHK J OLSON 17MAY02
APVD J OLSON 17MAY02
PRODUCT SPEC —
APPLICATION SPEC —
WEIGHT —
CUSTOMER DRAWING

TE Connectivity

NAME AMPMODU MOD II RECEPTACLE ASSEMBLY, HORIZONTAL, .100 CL, 2 ROW, CLOSED-ENTRY, SHORT POINT OF CONTACT, END-TO-END STACKABLE

SIZE	CAGE CODE	DRAWING NO	RESTRICTED TO
A1	00779	C-535512	—

SCALE 5:1 SHEET 1 OF 1 REV Y6

4805 (3/11)

X-ON Electronics

Largest Supplier of Electrical and Electronic Components

Click to view similar products for Headers & Wire Housings ***category:***

Click to view products by TE Connectivity ***manufacturer:***

Other Similar products are found below :

892-18-020-10-001101 58102-G61-06LF 582553-1 0009485154 009176003701906 0050291907 LY20-4P-DT1-P1E-BR 02.125.8002.8 609-3404 61062-3 61082-181009 622-3653LF 63453-116 636-1030 636-1427 636-3427 636-4007 641938-9 641991-4 644827-2 65817-010LF 65817-015LF 65863-015LF 66207-023LF 67095-007LF 67601157 68645-018 68648-049 70.362.1628.0 70-4210 70-4226B 70-4853B 707-5020 707-5028 71.350.2428.0 71918-208LF 71961-016LF 733-134 733-162 754199-000 760-3052 787-8014-00 79531-3000 FCN-360C032-B FCN-367T-T012/H FCN-723D010/2 80.063.4001.1 800-90-001-10-001000 800-90-010-10-002000 801-43-002-10-013000