THIS DRAWING IS UNPUBLISHED. RELEASED FOR PUBLICATION 20
DIFFUSION RESTREINTE AMP LIBRE A LA DIFFUSION
© COPYRIGHT 20 BY - ALL RIGHTS RESERVED. TOUS DROITS RESERVES.

REVISIONS

P	LTR REV	DESCRIPTION MODIFICATIONS	DATE	DWN DESS.	APVD APP.
	B	COTE AGRAFE 1.02 (REP 9)	20MAY2014	PB	JPP
	C	AJOUT DEPOULLE COTE REP 32	06OCT2015	PB	XR
	D	AJOUT TOLERANCE REP 10	04MAR2016	PB	XR
	E	MODIFICATION LOGO TE	04JUL2016	PB	XR

PORTE-LANGUETTE EN POSITION DE LIVRAISON
TAB HOUSING IN DELIVERING POSITION

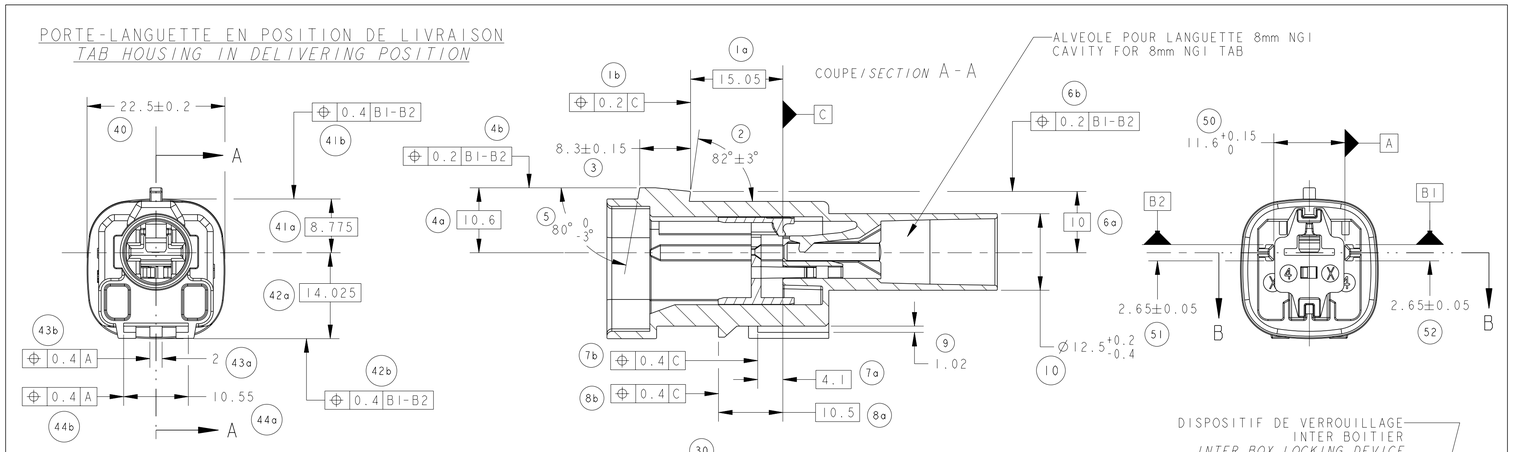

MARQUAGE DU VERROU SECONDAIRE
SECONDARY LOCK MARKING

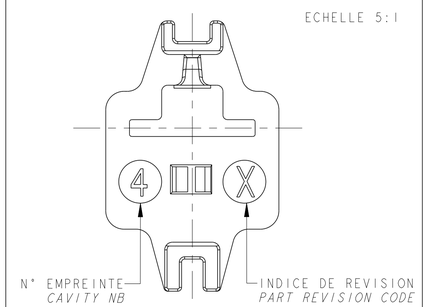

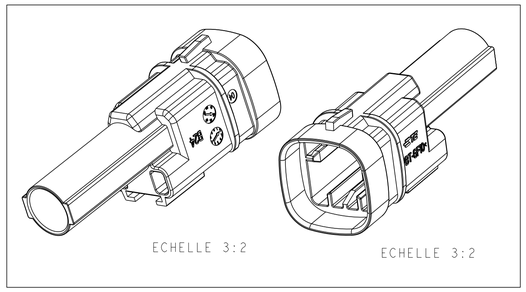

REFERENCES TE POUR CABLEURS
TE PART NUMBERS FOR HARNESS MAKERS

COMPOSANTS *COMPONENTS*	REF TE *TE PN*	MATIERE/*MATERIAL*
LANGUETTE 8mm NGI G2: GAMME DE 3 A 6 mm² *8mm NGI TAB G2: RANGE FROM 3 TO 6 mm²*	1544332-1	CUIVRE MICRO-ALLIE *MICRO ALLOYED COPPER*
LANGUETTE 8mm NGI G3: GAMME DE 7 A 10 mm² *8mm NGI TAB G3: RANGE FROM 7 TO 10 mm²*	1544333-1	CUIVRE MICRO-ALLIE *MICRO ALLOYED COPPER*
JOINT UNIFILAIRE A SERTIR DIAMETRE FIL DE 3.18 A 4.2 mm *SINGLE WIRE SEAL WIRE DIAMETER FROM 3.18 TO 4.2 mm*	1544316-1	VERT *GREEN*
JOINT UNIFILAIRE A SERTIR DIAMETRE FIL DE 4.87 A 5.63 mm *SINGLE WIRE SEAL WIRE DIAMETER FROM 4.87 TO 5.63 mm*	1544316-2	ORANGE *ORANGE*

VUE SUIVANT E
FOLLOWING VIEW E

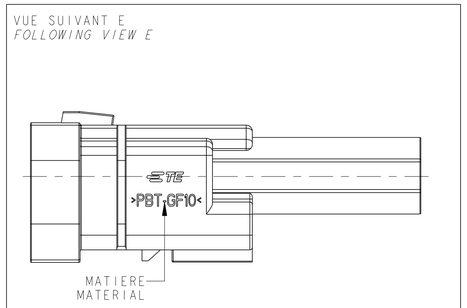

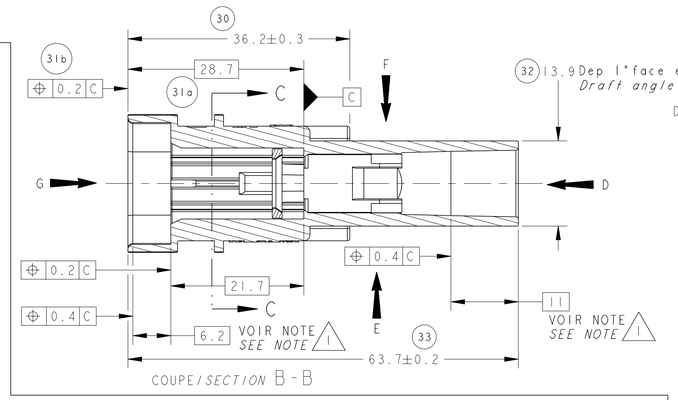

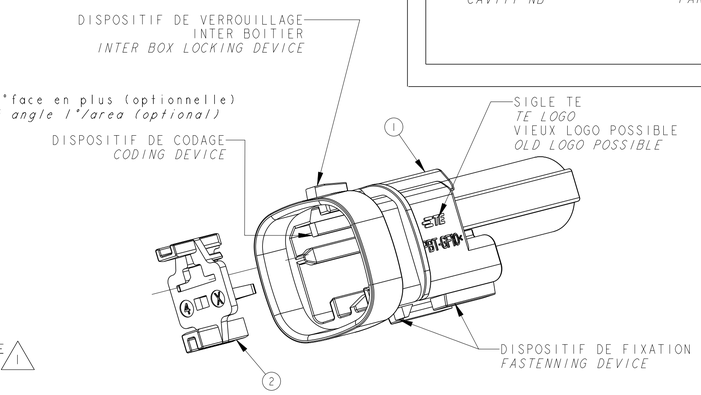

VUE SUIVANT F
FOLLOWING VIEW F

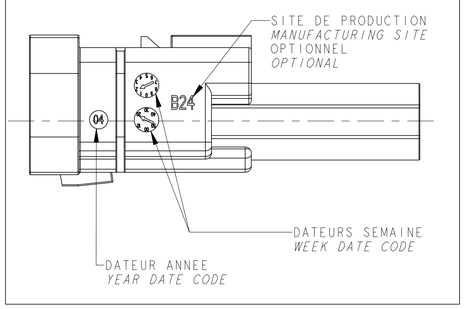

VERROU SECONDAIRE EN POSITION OUVERTE
SECONDARY LOCK IN OPENED POSITION

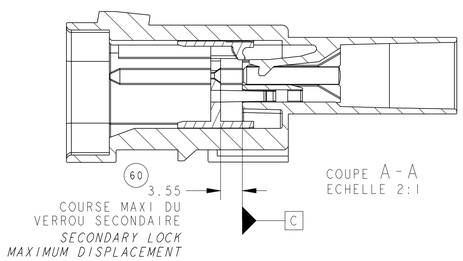

COMPOSANTS / *COMPONENTS*

COMPOSANT *ITEM*	DESIGNATION *DESCRIPTION*	MATIERE *MATERIAL*	COULEUR *COLOR*	QTE *QTY*
1	PORTE LANGUETTE *TAB HOUSING*	PBT-FV10 V0 *PBT-GF10 V0*	VOIR TABLEAU *SEE TABLE*	1
2	VERROU SECONDAIRE *SECONDARY LOCK*	PBT-FV10 V0 *PBT-GF10 V0*	JAUNE *YELLOW*	1

NOTES/NOTA :

1. ZONE SANS PLAN DE JOINT ET EXEMPTE DE MARQUES OU DE RAYURES
AREA WITHOUT ANY JUNCTION LINES, MARKS OU BURRS

COMPOSANTS ASSOCIES POUR CABLEURS
ASSOCIATED COMPONENTS FOR HARNESS MAKERS

COMPOSANTS *COMPONENTS*	REF TE *TE PN*	MATIERE *MATERIAL*	COULEUR *COLOR*
PORTE CLIP IV 8mm NGI *1 WAY 8mm NGI RECEPTACLE HOUSING*	1544601-1	PBT HB	NOIR/*BLACK*
PORTE CLIP IV 8mm NGI *1 WAY 8mm NGI RECEPTACLE HOUSING*	1544601-2	PBT HB	BLEU/*BLUE*
PORTE CLIP IV 8mm NGI *1 WAY 8mm NGI RECEPTACLE HOUSING*	1544601-3	PBT HB	GRIS/*GREY*
PORTE CLIP IV 8mm NGI ETANCHE *1 WAY 8mm NGI SEALED RECEPTACLE HOUSING*	1544603-1	-	NOIR/*BLACK*
PORTE CLIP IV 8mm NGI ETANCHE *1 WAY 8mm NGI SEALED RECEPTACLE HOUSING*	1544603-2	-	BLEU/*BLUE*
PORTE CLIP IV 8mm NGI ETANCHE *1 WAY 8mm NGI SEALED RECEPTACLE HOUSING*	1544603-3	-	GRIS/*GREY*

VUE SUIVANT G
FOLLOWING VIEW G

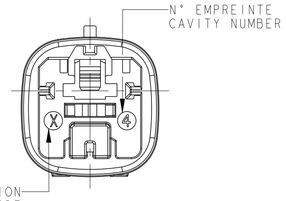

PORTE LANGUETTE SANS VERROU SECONDAIRE
TAB HOUSING WITHOUT SECONDARY LOCK

VERROU SECONDAIRE EN POSITION FERMEE
SECONDARY LOCK IN CLOSED POSITION

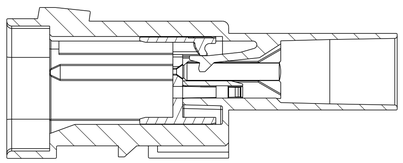

REFERENCE DES COMPOSANTS / *COMPONENTS PART NUMBER*

REFERENCE TE *TE PN*	1544606-1	1544606-2	1544606-3
	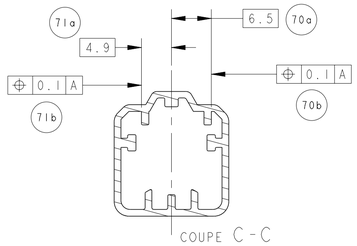	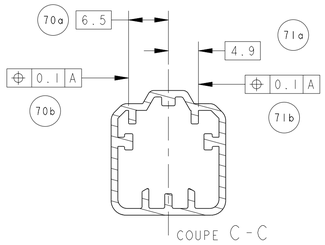	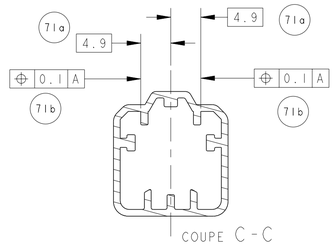
COULEUR *COLOR*	NOIR / *BLACK*	BLEU / *BLUE*	GRIS / *GREY*

THIS DRAWING IS A CONTROLLED DOCUMENT.
CE PLAN EST UN DOCUMENT CONTROLE PAR AMP INCORPORATED.
DIMENSIONS: mm
TOLERANCES UNLESS OTHERWISE SPECIFIED: TOLERANCES NON SPECIFIEES (SUIV NB DE DECIMALES): 0 PLC/DEC: ±0.2 1 PLC/DEC: ±0.2 2 PLC/DEC: ±0.2 3 PLC/DEC: ±0.2 4 PLC/DEC: ±0.2 ANGLES ±5°
MATERIAL MATIERE: VOIR TABLEAU / SEE TABLE
FINISH FINITION: - / -

DWN/DESSINE	F.SAPET	31JUL2007
CHK/VERIFIE	P.CHARLES	31JUL2007
APVD/APPROUVE	J.DAHER	31JUL2007
PRODUCT SPEC SPEC. PRODUIT	108-15282	
APPLICATION SPEC SPEC. APPLICATION	411-15664	
WEIGHT MASSE APPROX.	9.4 g	

TE Connectivity

NAME TITRE: 1 WAY 8mm NGI TAB HOUSING - SEALED TAB HOUSING

SIZE FORMAT	CAGE CODE	DRAWING NO No PLAN	RESTRICTED TO RESERVE A
A1	-	C-1544606	-

Customer Drawing /PLAN CLIENT — UNIQUEMENT POUR REFERENCE — SCALE ECHELLE 2:1 — SHEET FEUILLE 1 OF DE 1 — REV E

4805 (3/13)

X-ON Electronics

Largest Supplier of Electrical and Electronic Components

Click to view similar products for Automotive Connectors ***category:***

Click to view products by TE Connectivity ***manufacturer:***

Other Similar products are found below :

003-018-000 60403001 60993906-B M902-2131 M902-2161 M902-2344 72.330.1035.1 73.353.4028.0 F119300-B F166900 F258300-B F358300-B F407400 F444110 F487000 F509500B-B 827153-1 8N1515-32-24P 9-1326729-8 925474-1 928905-1 964562-4 968782-1 GT17SA-8DS-HU 98891-1012 98947-1016 12004147 12004475-L 12010290 12010309-B 12015454 12020219-B 12041318-B 12052225-L 12052466 12064869 12004327-B 12015308 12015384 12015909 1-21030-1 12041254 12041318 12047946-B 12047957 12047957-L 12059473 12066261 12110546 12110546-B