THIS DRAWING IS UNPUBLISHED. RELEASED FOR PUBLICATION -,- .
© COPYRIGHT - By - ALL RIGHTS RESERVED.

REVISIONS

P	LTR	DESCRIPTION	DATE	DWN	APVD
	A8	REVISED PER ECO-17-001761	10MAY2017	RK	AS

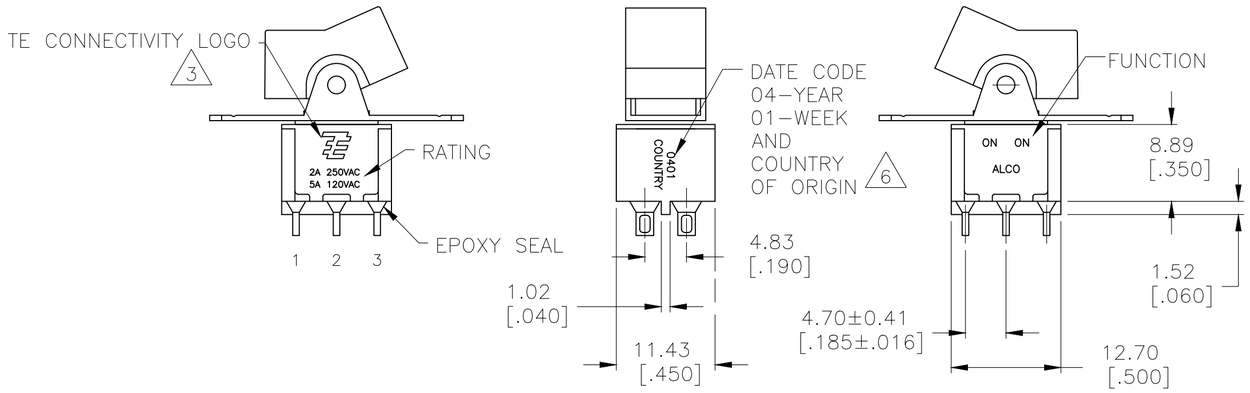

1 ALL MATERIALS AND FINISHES SHALL COMPLY WITH EU DIRECTIVE 2002/95/EC OF 27JAN2003 (ROHS).

2 G CONTACT OPTION CAN BE USED FOR SIGNAL OR POWER LEVEL SWITCHING. IF SWITCH IS USED AT LEVELS EXCEEDING .4VA @ 20V AC/DC, SWITCH IS RENDERED FOR POWER SWITCHING ONLY DUE TO ARC REMOVAL OF GOLD PLATING. RATING MARKED ON THE SWITCH IS 2A 250VAC, 5A 120VAC.

3 TE CONNECTIVITY LOGO PER PER TEC-202-36.

5 SP3T FUNCTION ACHIEVED WITH FUNCTIONS 11, 13, & 15 BY CUSTOMER APPLIED JUMPER BETWEEN TERMINALS 3 & 5.

6 DATE CODE AND COUNTRY OF ORIGIN MAY APPEAR ON EITHER SIDE OF SWITCH.

7 PANEL MOUNT BRACKET SUPPLIED WITH TERMINALS W, Z AND Z3 ONLY.

8 ALL LOGO, RATING, DATE CODE, AND FUNCTION MARKINGS TO BE LASER MARKED.

FUNCTION CHART

FUNCTION	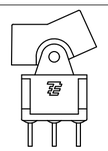 1 2 3 / 4 5 6	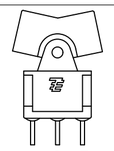 1 2 3 / 4 5 6	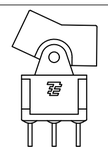 1 2 3 / 4 5 6
01	ON	NONE	ON
03	ON	OFF	ON
05	(ON)	OFF	(ON)
07	ON	OFF	(ON)
08	ON	NONE	(ON)
TERMINALS CONNECTED	2-3, 5-6	---	1-2, 4-5
11	ON	ON	ON
13	ON	ON	(ON)
15	(ON)	ON	(ON)
TERMINALS CONNECTED	2-3, 5-6	2-3, 4-5	1-2, 4-5
SP3T SCHEMATIC (11, 13 & 15 ONLY) NOTE 5	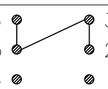	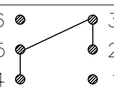	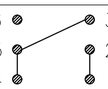
	IN 2, OUT 6	IN 2, OUT 4	IN 2, OUT 1

NONE: NO MECHANICAL POSITION
OFF: MECHANICAL POSITION WITH NO ELECTRICAL CONNECTION
(ON): MOMENTARY ACTION

SPECIFICATIONS

RATING, B CONTACTS	.4VA MAX @20V MAX. AC OR DC
RATING, G CONTACTS-SEE NOTE 2	.4VA MAX @20V MAX. AC OR DC OR
	5A @120 VAC OR 28 VDC (RESISTIVE)
	2A @250 VAC (RESISTIVE)
RATING, Q CONTACTS	5A @120 VAC OR 28 VDC (RESISTIVE)
	2A @250 VAC (RESISTIVE)
ELECTRICAL LIFE	6,000 CYCLES AT RATED LOAD
CONTACT RESISTANCE	10 MILLIOHMS MAX INITIAL @ 2-4VDC, 100MA
INSULATION RESISTANCE	1,000 MEGOHMS MIN
DIELECTRIC WITHSTANDING VOLTAGE	1,000 V RMS AT SEA LEVEL
OPERATING TEMPRATURE	-30C TO 85C

PART NUMBER SEQUENCE

MODEL	FUNCTION	ACTUATOR	TERMINAL	CONTACT	ACTUATOR COLOR	FRAME COLOR	ROHS
A2							04
	01	J1	A	B	0 BLACK (STD)	0 BLACK (STD)	
	03	J3	AV2	G	1 BROWN	1 BROWN	
	05	J50	C	Q	2 RED	2 RED	
	07	J51	V3		3 ORANGE	3 ORANGE	
	08	J52	V4		4 YELLOW	4 YELLOW	
	11	J2	V7		5 GREEN	5 GREEN	
	13	J4	W		6 BLUE	6 BLUE	
	15	J60	W4		8 GRAY	8 GRAY	
		J61	Z		9 WHITE	9 WHITE	
		J62	Z3				

THIS DRAWING IS A CONTROLLED DOCUMENT.

DIMENSIONS: mm [INCHES]

TOLERANCES UNLESS OTHERWISE SPECIFIED:
0 PLC ± -
1 PLC ± -
2 PLC ± -
3 PLC ± .010
4 PLC ± -
ANGLES ± 4°

MATERIAL -
FINISH -

DWN M.BINNER 06JAN05
CHK M.ZITTO 06JAN05
APVD M.ZITTO 06JAN05
PRODUCT SPEC —
APPLICATION SPEC —
WEIGHT

TE Connectivity

NAME GEMINI A SERIES ROCKER SWITCH DOUBLE POLE

SIZE A2 | CAGE CODE 00779 | DRAWING NO C-1571987 | RESTRICTED TO —

CUSTOMER DRAWING | SCALE 2:1 | SHEET 1 OF 5 | REV A8

1471-9 (1/15)

1571987

THIS DRAWING IS UNPUBLISHED. RELEASED FOR PUBLICATION -,- .
© COPYRIGHT - By - ALL RIGHTS RESERVED.

REVISIONS					
P	LTR	DESCRIPTION	DATE	DWN	APVD
	-	SEE SHEET 1	-	-	-

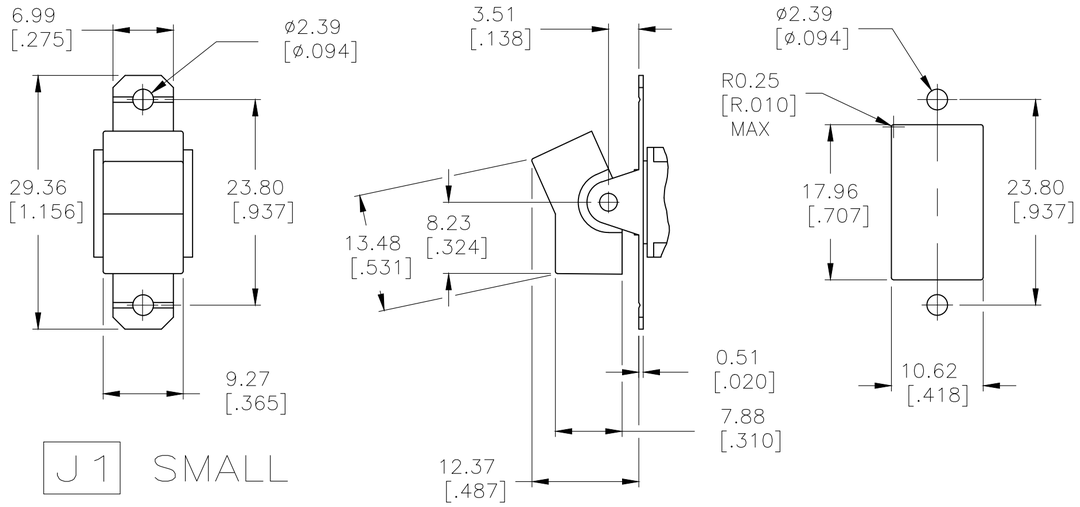

J1 SMALL

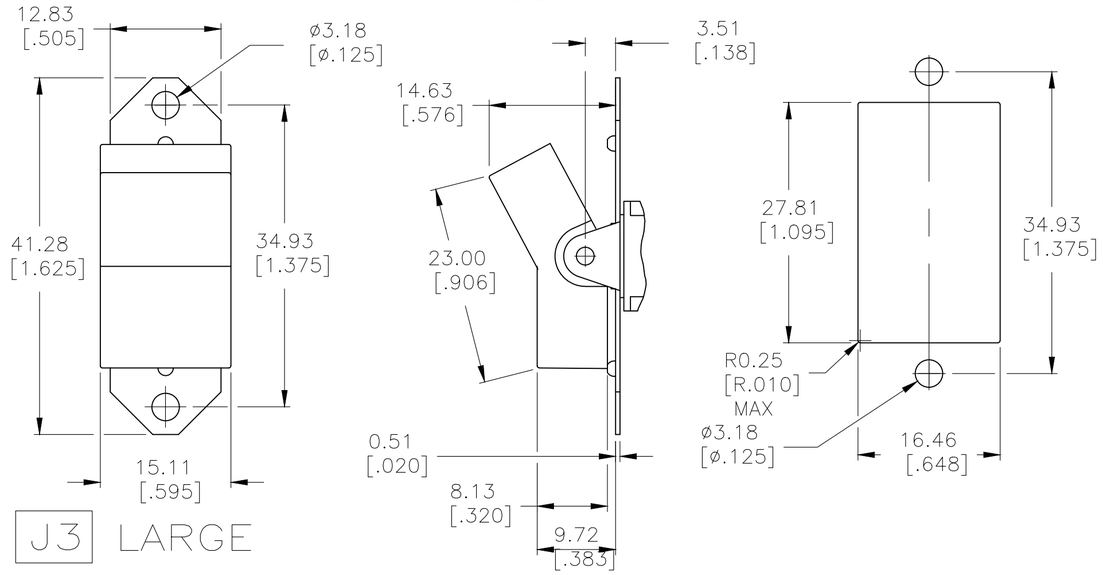

J3 LARGE

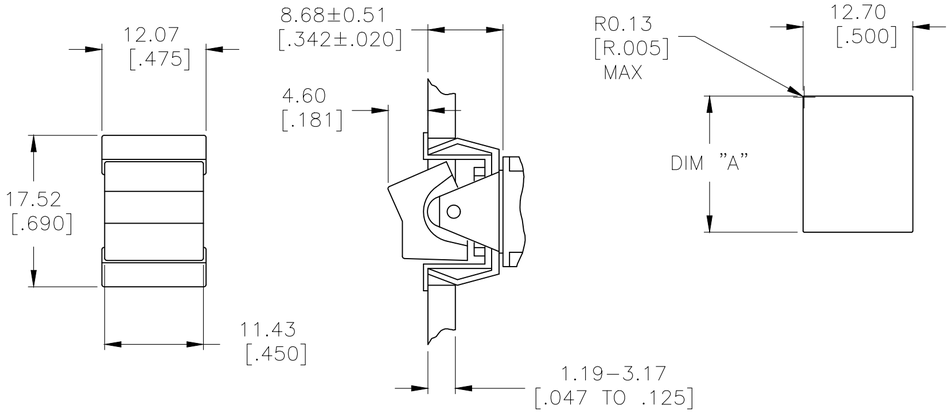

J50 SNAP–IN

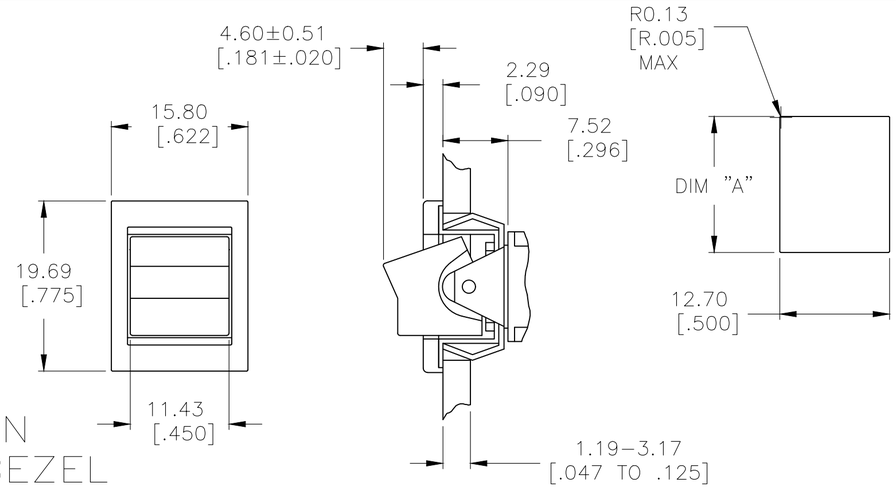

J51 SNAP–IN WITH BEZEL

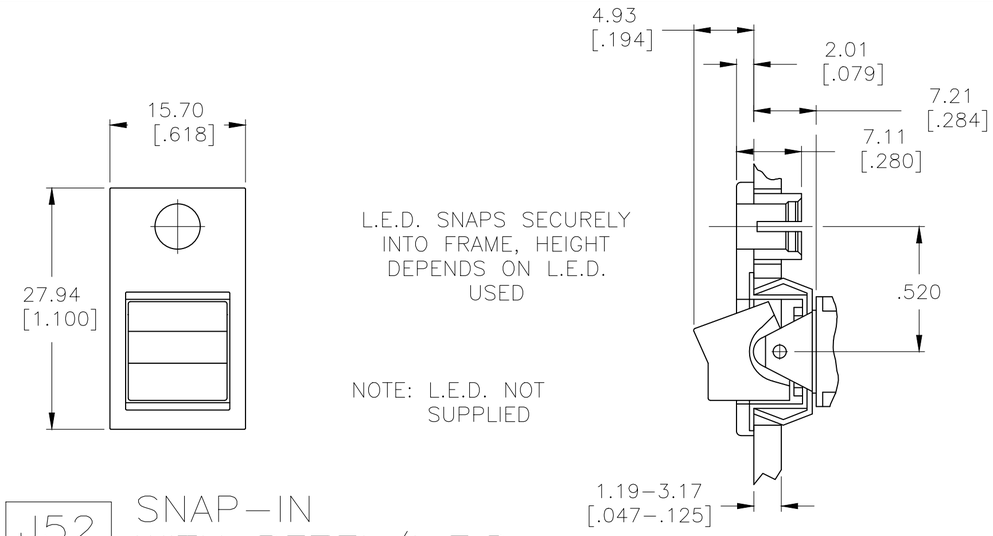

L.E.D. SNAPS SECURELY INTO FRAME, HEIGHT DEPENDS ON L.E.D. USED

NOTE: L.E.D. NOT SUPPLIED

J52 SNAP–IN WITH BEZEL/L.E.D.

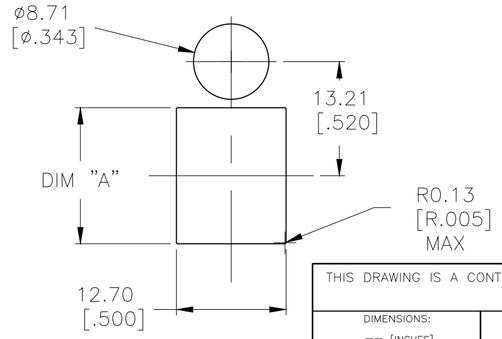

1.52–3.17[.060–.125]	15.75–15.87[.620–.625]
1.19–1.50[.047–.059]	15.72[.619]
PANEL THICKNESS	DIM "A"

THIS DRAWING IS A CONTROLLED DOCUMENT.

DIMENSIONS: mm [INCHES]

TOLERANCES UNLESS OTHERWISE SPECIFIED:
0 PLC ± –
1 PLC ± –
2 PLC ± –
3 PLC ± .010
4 PLC ± –
ANGLES ± 4°

MATERIAL –
FINISH –

DWN M.BINNER 06JAN05
CHK M.ZITTO 06JAN05
APVD M.ZITTO 06JAN05
PRODUCT SPEC —
APPLICATION SPEC —
WEIGHT —

TE Connectivity

NAME GEMINI A SERIES ROCKER SWITCH DOUBLE POLE

SIZE	CAGE CODE	DRAWING NO	RESTRICTED TO
A2	00779	C-1571987	—

CUSTOMER DRAWING | SCALE 2:1 | SHEET 2 OF 5 | REV A8

1571987

1471-9 (1/15)

THIS DRAWING IS UNPUBLISHED. RELEASED FOR PUBLICATION -,- .
© COPYRIGHT - By - ALL RIGHTS RESERVED.

REVISIONS					
P	LTR	DESCRIPTION	DATE	DWN	APVD
	-	SEE SHEET 1	-	-	-

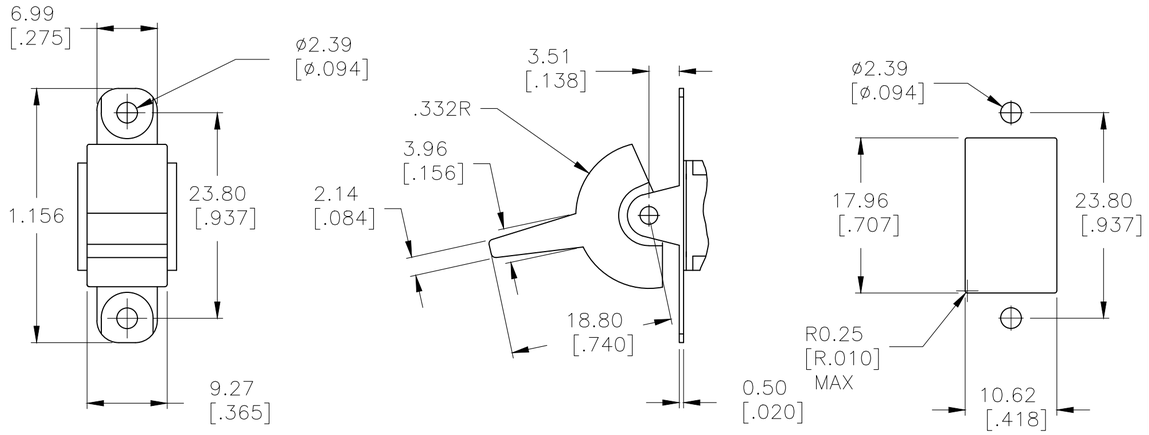

J2 SMALL

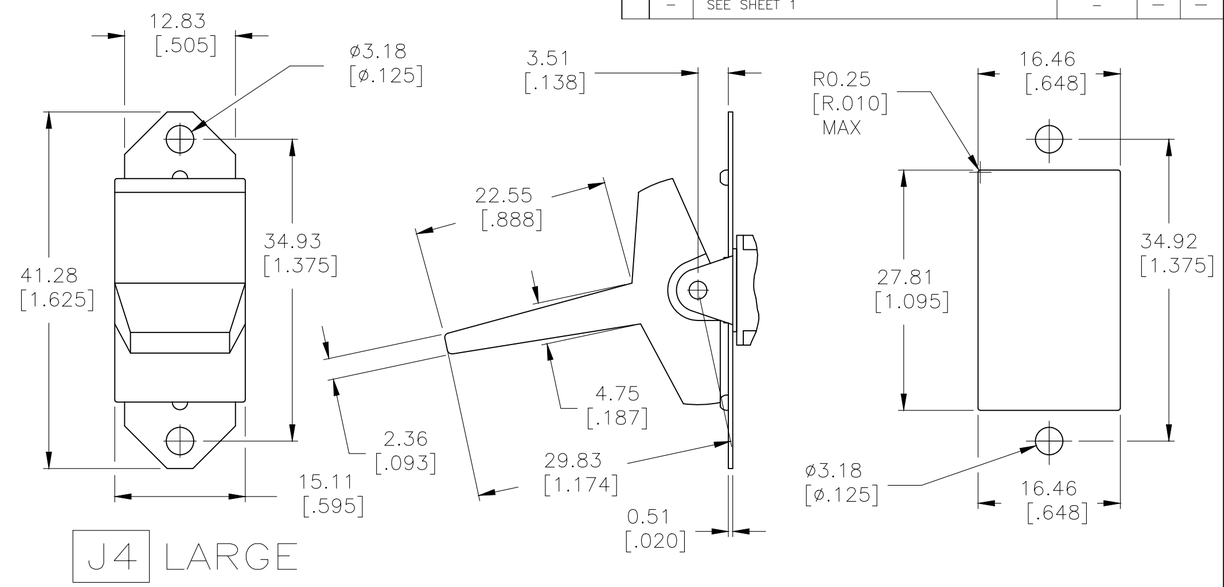

J4 LARGE

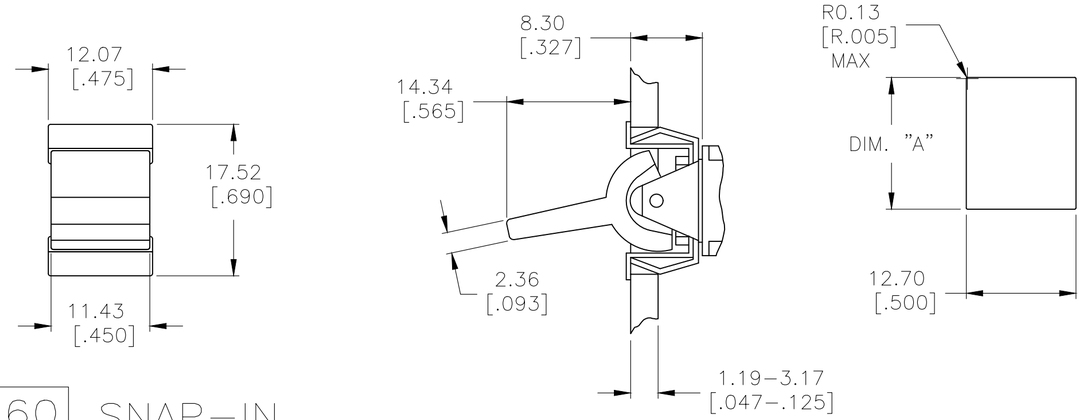

J60 SNAP–IN

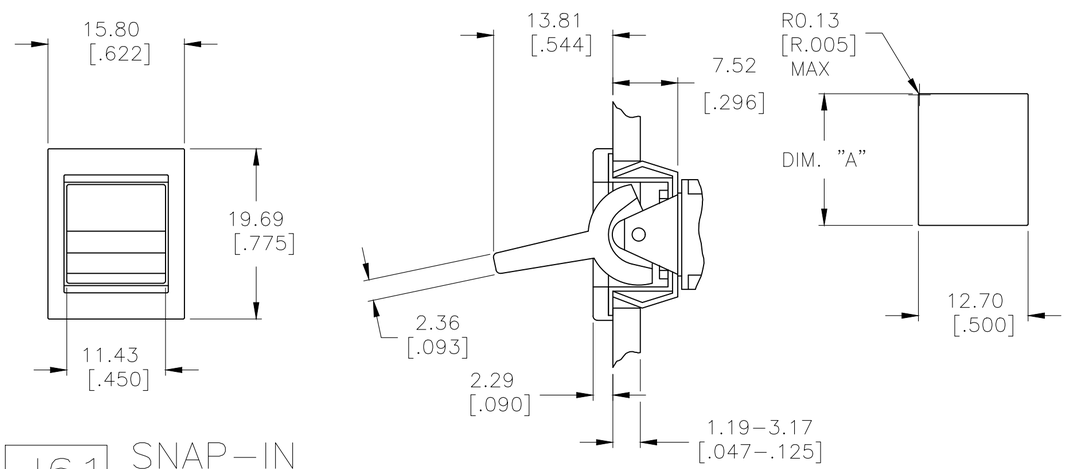

J61 SNAP–IN WITH BEZEL

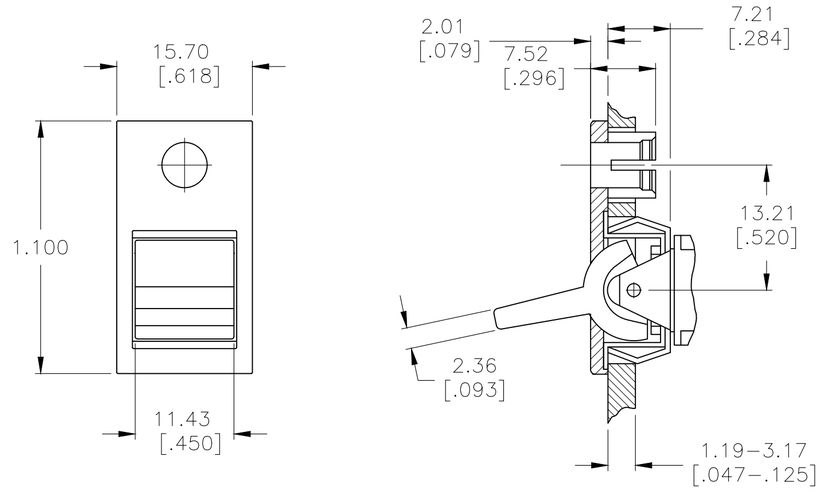

J62 SNAP–IN WITH BEZEL/L.E.D.

NOTE: L.E.D. NOT SUPPLIED

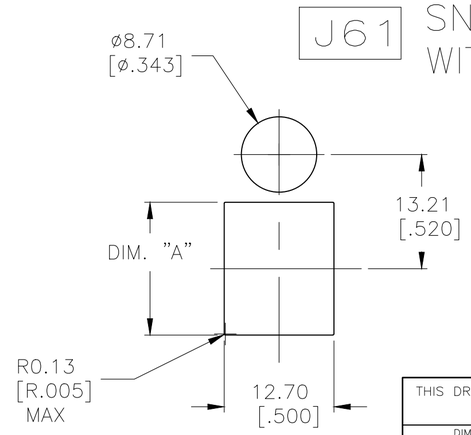

1.52–3.17[.060–.125]	15.75–15.87[.620–.625]
1.19–1.50[.047–.059]	15.72[.619]
PANEL THICKNESS	DIM "A"

THIS DRAWING IS A CONTROLLED DOCUMENT.

DIMENSIONS: mm [INCHES]

TOLERANCES UNLESS OTHERWISE SPECIFIED:
0 PLC ± –
1 PLC ± –
2 PLC ± –
3 PLC ± .010
4 PLC ± –
ANGLES ± 4°

MATERIAL –
FINISH –

DWN M.BINNER 06JAN05
CHK M.ZITTO 06JAN05
APVD M.ZITTO 06JAN05
PRODUCT SPEC —
APPLICATION SPEC —
WEIGHT —

TE Connectivity

NAME GEMINI A SERIES ROCKER SWITCH DOUBLE POLE

SIZE A2 | CAGE CODE 00779 | DRAWING NO C-1571987 | RESTRICTED TO —

CUSTOMER DRAWING | SCALE 2:1 | SHEET 3 OF 5 | REV A8

1571987

1471-9 (1/15)

THIS DRAWING IS UNPUBLISHED. RELEASED FOR PUBLICATION -.- .
© COPYRIGHT - By - ALL RIGHTS RESERVED.

REVISIONS					
P	LTR	DESCRIPTION	DATE	DWN	APVD
	-	SEE SHEET 1	-	-	-

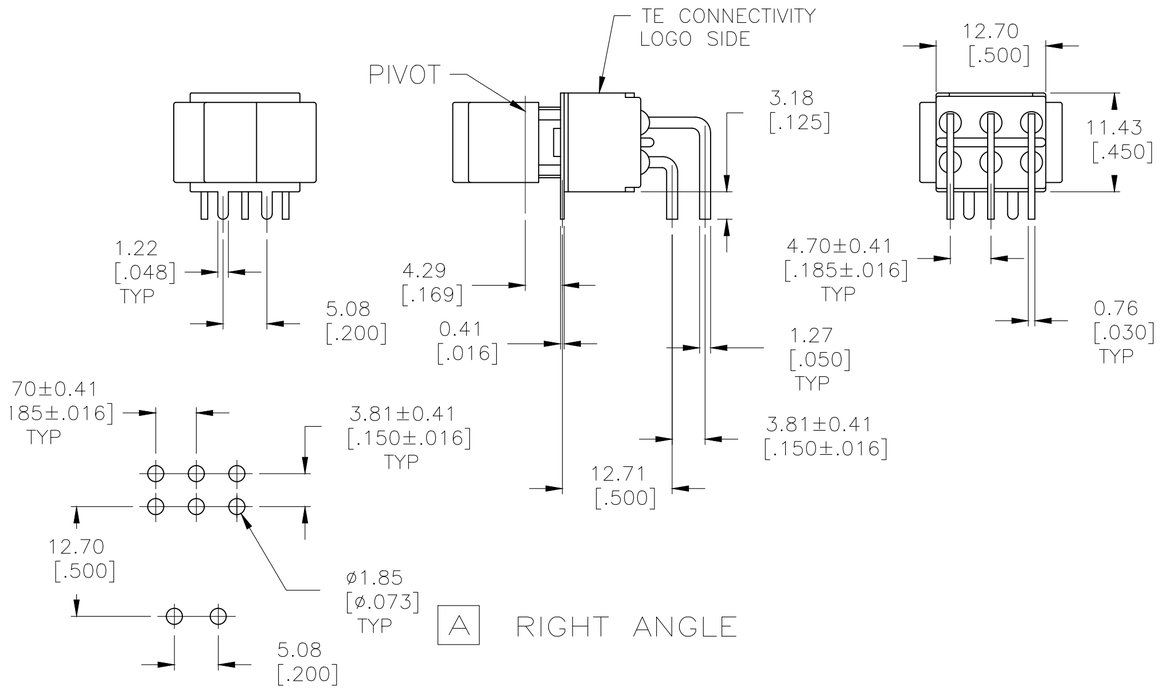

A RIGHT ANGLE

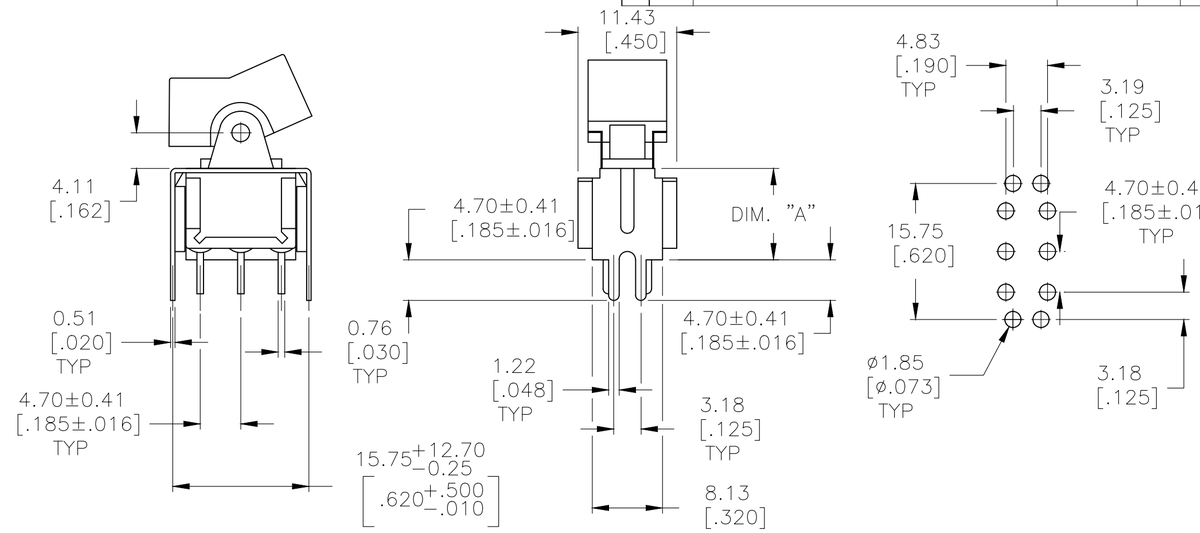

V3	V4

VERTICAL SUPPORT BRACKET

OPTION CODE	DIM "A"
V3	11.68[.460]
V4	16.00[.630]

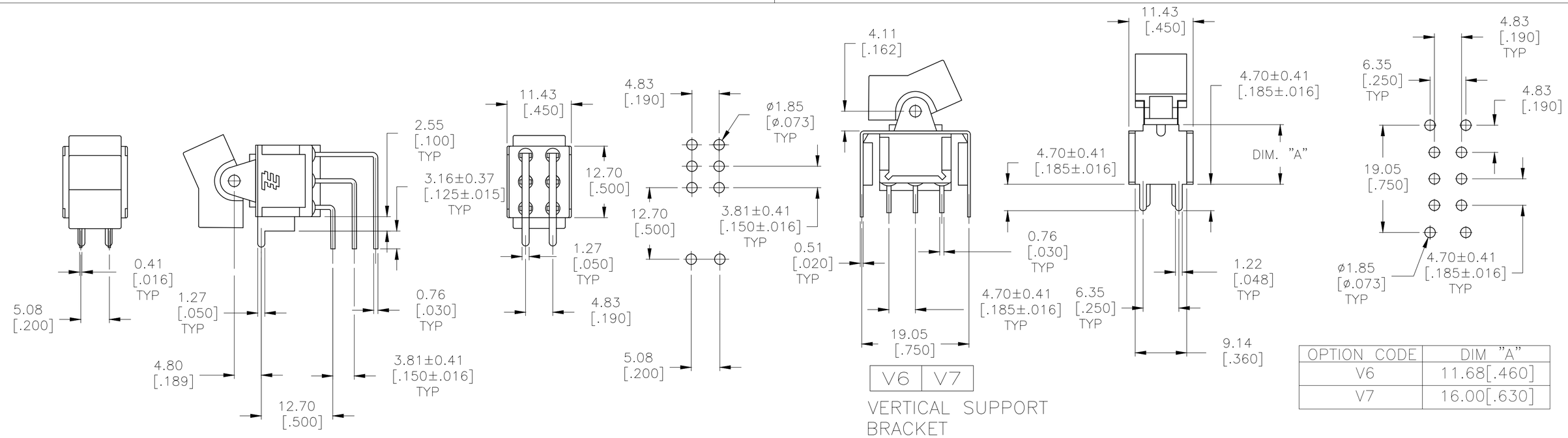

AV2 VERTICAL RIGHT ANGLE

V6	V7

VERTICAL SUPPORT BRACKET

OPTION CODE	DIM "A"
V6	11.68[.460]
V7	16.00[.630]

1571987

THIS DRAWING IS A CONTROLLED DOCUMENT.

DIMENSIONS: mm [INCHES]

TOLERANCES UNLESS OTHERWISE SPECIFIED:
0 PLC ± -
1 PLC ± -
2 PLC ± -
3 PLC ± .010
4 PLC ± -
ANGLES ± 4°

MATERIAL -
FINISH -

DWN M.BINNER 06JAN05
CHK M.ZITTO 06JAN05
APVD M.ZITTO 06JAN05
PRODUCT SPEC —
APPLICATION SPEC —
WEIGHT —

TE Connectivity

NAME GEMINI A SERIES ROCKER SWITCH DOUBLE POLE

SIZE	CAGE CODE	DRAWING NO	RESTRICTED TO
A2	00779	C-1571987	—

CUSTOMER DRAWING | SCALE 2:1 | SHEET 4 OF 5 | REV A8

1471-9 (1/15)

THIS DRAWING IS UNPUBLISHED. RELEASED FOR PUBLICATION -,- .
© COPYRIGHT - By - ALL RIGHTS RESERVED.

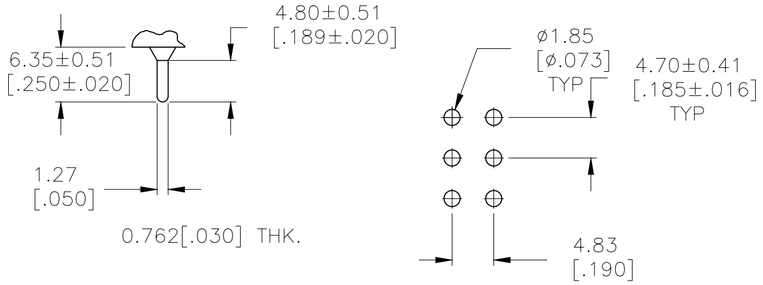

C PRINTED CIRCUIT

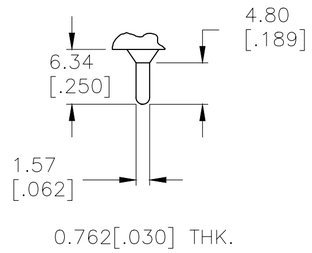

Z3 QUICK CONNECT

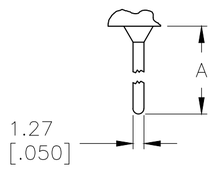

OPTION	DIM A
W	18.69[.736]
W4	26.97[1.062]

0.762[.030] THK.

W W4 WIRE WRAP

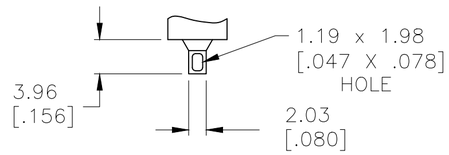

0.762[.030] THK.

Z WIRE LUG

MATERIALS CHART

COMPONENT NAME	BASE MATERIAL	FINISH
CASE	DAP, RED, UL94 V-0	
FRAME	STAINLESS STEEL	
B TERMINALS & CONTACTS	COPPER	GOLD OVER NICKEL
G TERMINALS & CONTACTS	COPPER	GOLD OVER SILVER
Q TERMINALS & CONTACTS	COPPER	SILVER
ACTUATOR	PHENOLIC, BLACK, UL94 V-1	
ROCKER CAP	NYLON, BLACK, UL94 V-1	
BUSHING & ACTUATOR LEVER	ZINC ALLOY	NICKEL
SPRING	MUSIC WIRE	
SUPPORT BRACKET	BRASS	TIN
PIVOT PIN	STEEL	NICKEL
TERMINAL SEAL	EPOXY, UL94 V-1	

REVISIONS

P	LTR	DESCRIPTION	DATE	DWN	APVD
	-	SEE SHEET 1	-	-	-

OBSOLETE	A213J61ZQ0004	4-1571987-4
	A211J51ZQ0004	4-1571987-3
	A208J61ZQ0004	4-1571987-2
OBSOLETE	A208J51ZQ0004	4-1571987-1
OBSOLETE	A208J1V3Q004	4-1571987-0
OBSOLETE	NOT ASSIGNED	3-1571987-9
	A207J61ZQ0004	3-1571987-8
	A207J51ZQ0004	3-1571987-7
OBSOLETE	A207J3ZQ004	3-1571987-6
OBSOLETE	A207J1ZQ004	3-1571987-5
	A205J61ZQ0004	3-1571987-4
	A205J51ZQ0004	3-1571987-3
OBSOLETE	A205J2ZQ004	3-1571987-2
	A205J2CQ004	3-1571987-1
	A205J1ZQ004	3-1571987-0
	A205J1AV2Q004	2-1571987-9
OBSOLETE	NOT ASSIGNED	2-1571987-8
	A203J61ZQ0004	2-1571987-7
	A203J51ZQ0004	2-1571987-6
OBSOLETE	NOT ASSIGNED	2-1571987-5
OBSOLETE	A203J1ZQ004	2-1571987-4
OBSOLETE	NOT ASSIGNED	2-1571987-3
OBSOLETE	A203J1CQ204	2-1571987-2
	A203J1AV2Q004	2-1571987-1
	A203J1AQ004	2-1571987-0
	A201J61ZQ0004	1-1571987-9
OBSOLETE	A201J61Z3Q0004	1-1571987-8
OBSOLETE	A201J51ZQ9904	1-1571987-7
OBSOLETE	NOT ASSIGNED	1-1571987-6
	A201J51ZQ0004	1-1571987-5
OBSOLETE	A201J50ZQ004	1-1571987-4
OBSOLETE	A201J50AV2Q804	1-1571987-3
OBSOLETE	A201J50AV2Q004	1-1571987-2
	A201J3ZQ004	1-1571987-1
	A201J3ZB004	1-1571987-0
OBSOLETE	A201J2ZQ004	1571987-9
	A201J2CQ004	1571987-8
	A201J1ZQ004	1571987-7
OBSOLETE	A201J1V3Q004	1571987-6
	A201J1CQ004	1571987-5
	A201J1AV2Q004	1571987-4
	A201J1AQ204	1571987-3
	A201J1AQ004	1571987-2
OBSOLETE	A211J61Z3Q0004	1571987-1
	ALCO P/N	P/N

1571987

THIS DRAWING IS A CONTROLLED DOCUMENT.

DIMENSIONS: mm [INCHES]

TOLERANCES UNLESS OTHERWISE SPECIFIED:
0 PLC ± -
1 PLC ± -
2 PLC ± -
3 PLC ± .010
4 PLC ± -
ANGLES ± 4°

MATERIAL -
FINISH -

DWN M.BINNER 06JAN05
CHK M.ZITTO 06JAN05
APVD M.ZITTO 06JAN05
PRODUCT SPEC —
APPLICATION SPEC —
WEIGHT —

TE Connectivity

NAME GEMINI A SERIES ROCKER SWITCH DOUBLE POLE

SIZE A2 | CAGE CODE 00779 | DRAWING NO C-1571987 | RESTRICTED TO —

CUSTOMER DRAWING | SCALE 2:1 | SHEET 5 OF 5 | REV A8

X-ON Electronics

Largest Supplier of Electrical and Electronic Components

Click to view similar products for Rocker Switches ***category:***

Click to view products by TE Connectivity ***manufacturer:***

Other Similar products are found below :

VKD2GHNB-00000-000 VSD2GNNB-00000-000 6-1571986-5 6-1571986-9 632422-4B-KD 7036WWCDBX653+U622 8055K52Z7V 8138K20E6M50 FMC18A2200002 84206L 84312LX PREDD4-07F-BB0FW PREDD5-07F-BB0GW PRFDD1-16F-BB000 PRFDD3-16F-BB000 1-1634201-0 999-16702-001 A101J2ZQ004 A101J4ZQ004 A101J51CB0004 A107J51ZQ0004 A201J1AQ004 A201J1AV2Q004 A201J3ZB004 A201J50ZQ004 A203J51ZQ0004 A226L11YZQ A22L11A A435S1YZQ H8500XBBBBL-A H8653VBBG2577W HB130CHNWWNAAC 1251.0303 AE205J60V3B004 RH110C2NBB 1352.0107 1363.0201 AML25GBF2AA03GR 1571099-3 1571987-4 1571987-5 1571989-7 B123J77V7B2 B226J50W4Q22P B433J37ZQ22M 160212E 1801.1164 1831.1102 1833.3402 1837.1118