THIS DRAWING IS UNPUBLISHED. RELEASED FOR PUBLICATION -,- .
© COPYRIGHT - BY TYCO ELECTRONICS CORPORATION. ALL INTERNATIONAL RIGHTS RESERVED.

LOC	DIST
CM	00

REVISIONS

P	LTR	DESCRIPTION	DATE	DWN	APVD
	E	REVISED PER ECO-08-031188	06JAN09	HMR	CC

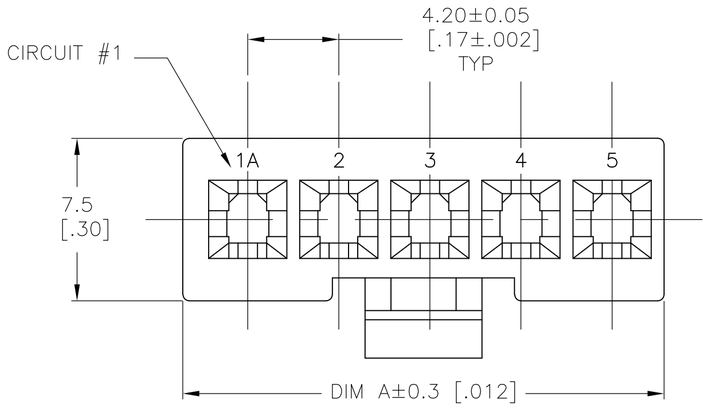

1. MATERIAL : NYLON 66 UL94V-0
2. TE LOGO, UL LOGO, AND CSA LOGO-SIZE, LOCATION, AND ORIENTATION OPTIONAL.

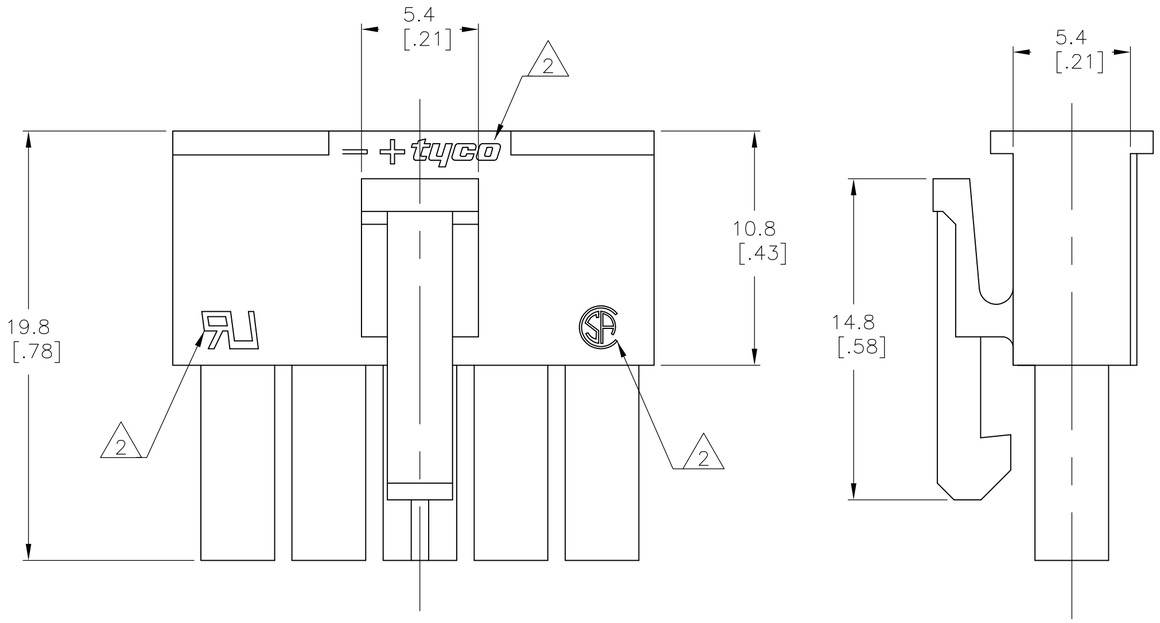

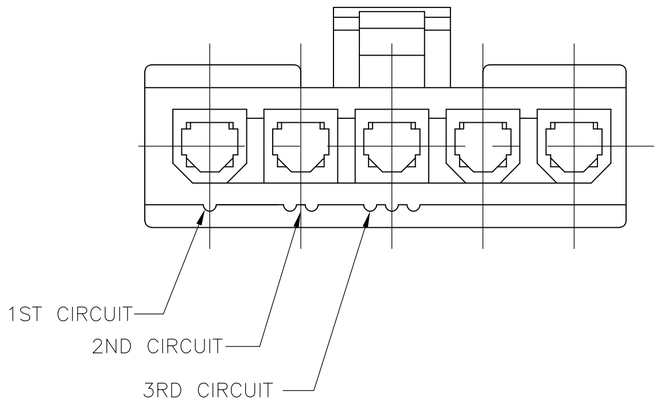

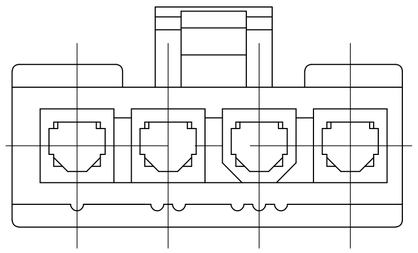

4 POSITION MATING FACE
(FOR POLARIZATION IDENTIFICATION)

SUPERCEDED BY 2029208-4	BLACK	18.0 [.71]	4	1-1586027-9
	WHITE	22.2 [.87]	5	1586027-5
	WHITE	18.0 [.71]	4	1586027-4
	COLOR	DIM A	POS	PART NUMBER

METRIC

THIS DRAWING IS A CONTROLLED DOCUMENT.

DIMENSIONS: mm [INCHES]

TOLERANCES UNLESS OTHERWISE SPECIFIED:
0 PLC ± -
1 PLC ± 0.2 [.01]
2 PLC ± -
3 PLC ± -
4 PLC ± -
ANGLES ± -

MATERIAL 1

FINISH -

DWN K.WHITAKER 09DEC03
CHK D. COLEY 09DEC03
APVD D. COLEY 09DEC03
PRODUCT SPEC —
APPLICATION SPEC —
WEIGHT —

Tyco Electronics
Tyco Electronics Corporation
Harrisburg, PA 17105-3608

NAME
RECEPTACLE, SINGLE ROW, VAL-U-LOK(TM)

SIZE	CAGE CODE	DRAWING NO	RESTRICTED TO
A2	00779	C-1586027	—

CUSTOMER DRAWING | SCALE 5:1 | SHEET 1 OF 1 | REV E

1586027

X-ON Electronics

Largest Supplier of Electrical and Electronic Components

Click to view similar products for Headers & Wire Housings ***category:***

Click to view products by TE Connectivity ***manufacturer:***

Other Similar products are found below :

892-18-020-10-001101 58102-G61-06LF 582553-1 0009485154 009176003701906 0050291907 LY20-4P-DT1-P1E-BR 02.125.8002.8 609-3404 61062-3 61082-181009 622-3653LF 63453-116 636-1030 636-1427 636-3427 636-4007 641938-9 641991-4 644827-2 65817-010LF 65817-015LF 65863-015LF 66207-023LF 67095-007LF 67601157 68645-018 68648-049 70.362.1628.0 70-4210 70-4226B 70-4853B 707-5020 707-5028 71.350.2428.0 71918-208LF 71961-016LF 733-134 733-162 754199-000 760-3052 787-8014-00 79531-3000 FCN-360C032-B FCN-367T-T012/H FCN-723D010/2 80.063.4001.1 800-90-001-10-001000 800-90-010-10-002000 801-43-002-10-013000