THIS DRAWING IS UNPUBLISHED. RELEASED FOR PUBLICATION 2002
© COPYRIGHT 2002 - ALL RIGHTS RESERVED.

THE DRAWING SHOWS THE 2-DIMENSIONAL REFERENCE COMPONENT CONDITION OF THE ASSEMBLY TO IDENTIFY AND SPECIFY THE NECESSARY DIMENSIONS ONLY. THE DELIVERED PARTS MAY DEVIATE FROM THE DRAWING REGARDING THE ORIENTATION AND POSITION OF EACH COMPONENT (e.g. SLACK CABLE). SO FAR THE FUNCTIONALITY IS NOT CONCERNED.

DIE ZEICHNUNG ZEIGT DEN 2-DIMENSIONALEN IDEALZUSTAND DES ZUSAMMENBAUTEILS BEZUEGLICH DER KOMPONENTEN ZUR IDENTIFIKATION UND SPEZIFIKATION DER NOTWENDIGEN DIMENSIONEN. HINSICHTLICH DER ORIENTIERUNG UND DER LAGE DER KOMPONENTEN (z.B. BIEGESCHLAFFES KABEL) KOENNEN DIE GELIEFERTEN TEILE VON DER ZEICHNUNG ABWEICHEN. SOFERN DIE FUNKTIONALITAET NICHT BEEINTRAECHTIGT IST.

LOC	DIST
A1	-

PROJECT No. EGAUT 02021

REVISIONS

P	LTR	DESCRIPTION	DATE	DWN	APVD
	C9	ECR-15-012070	22SEP2015	JBJH	BK
	C10	DIM 'L' FOR 2141868-1, -2 and -3 IS CHANGED TO 16.3mm	06OCT2017	GH	CASS
	C11	E-19-013005	20AUG2019	FRAN	CASS
	C12	Correction of Design 3	05JUN2020	FRAN	CASS

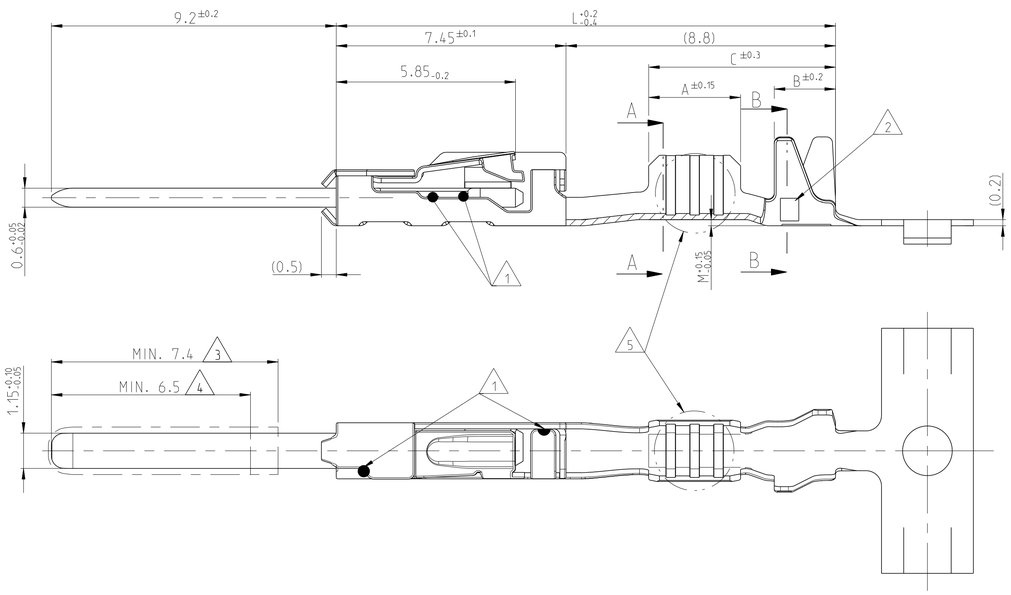

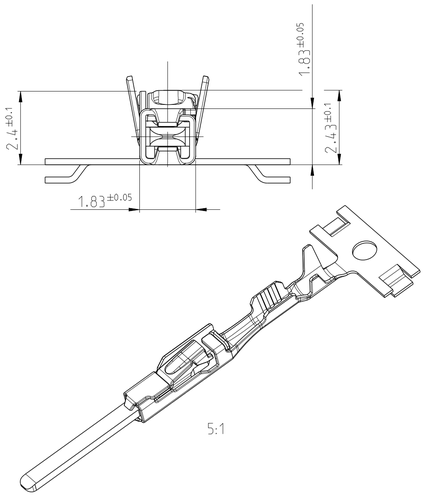

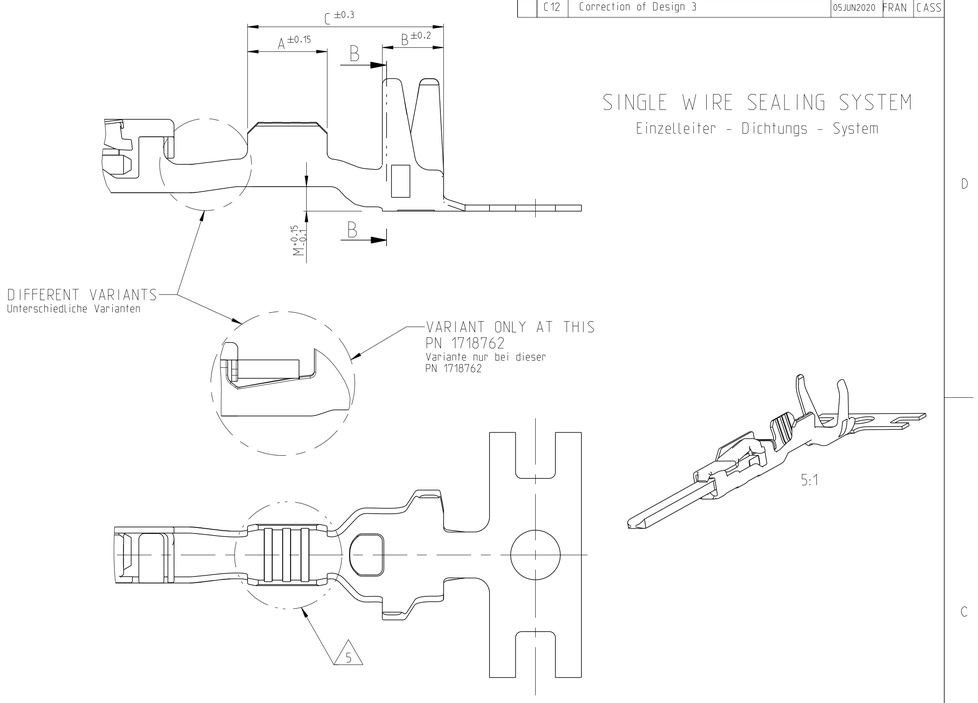

SINGLE WIRE SEALING SYSTEM
Einzelleiter - Dichtungs - System

SINGLE WIRE SEALING SYSTEM / Einzeldichtungssystem SEE APPLICATION SPECIFICATION / siehe Verarbeitungsspezifikation	1718762-3	B	1.0 - 1.5	1.9- 2.4	CuNiSi	CuSn0.15/0.2	TIN PLATED verzinnt	4 / 3 / TIN PLATED verzinnt	2	A = 3.0 B = 2.0 C = 6.8	E = 2.6 G = 2.9 D_{Dr} = 1.35	H = 4.4 K = 4.3 D_{ISO} = 2.9 M = 0.8	16.8
	1718762-2	C											
	1718762-1	B											
	1718760-3	A	0.5 - 0.75	1.4 - 1.9	CuNiSi	CuSn0.15/0.2	TIN PLATED verzinnt	4 / 3 / TIN PLATED verzinnt	2	A = 2.6 B = 2.0 C = 6.4	E = 2.0 G = 2.1 D_{Dr} = 1.1	H = 4.2 K = 4.3 D_{ISO} = 2.7 M = 0.8	16.3
	1718760-2	B											
	1718760-1	A											
	1718758-3	A	0.25 - 0.35	1.1 - 1.75	CuNiSi	CuSn0.15/0.2	TIN PLATED verzinnt	4 / 3 / TIN PLATED verzinnt	2	A = 2.6 B = 2.0 C = 6.4	E = 1.8 G = 1.8 D_{Dr} = 0.8	H = 4.2 K = 4.3 D_{ISO} = 2.6 M = 0.8	16.3
	1718758-2	B											
	1718758-1	A											
	2141868-3	A	6 0.13 - 0.22	2.6	CuNiSi	CuSn0.15/0.2	TIN PLATED verzinnt	4 / 3 / TIN PLATED verzinnt	1	A = 2.5 B = 1.9 C = 6.2	E = 1.5 G = 1.4	H = 4.0 K = 4.1 D_{ISO} = 2.6 M = 0.6	16.3
	2141868-2	A											
	2141868-1	A											
FLR CABLE / Leitung SEE APPLICATION SPECIFICATION / siehe Verarbeitungsspezifikation	1418762-3	A	1.0 - 1.5	1.9 - 2.4	CuNiSi	CuSn0.15/0.2	TIN PLATED verzinnt	4 / 3 / TIN PLATED verzinnt	3	A = 3.0 B = 2.0 C = 6.1	E = 2.6 G = 2.9 D_{Dr} = 1.35	H = 3.7 K = 3.9 D_{ISO} = 2.1 M = 0.2	16.3
	1418762-2	B											
	1418762-1	A											
	5-1418760-3	A	0.5 - 0.75	1.4 - 1.9	CuNiSi	CuSn0.15/0.2	TIN PLATED verzinnt	4 / 3 / TIN PLATED verzinnt	2	A = 3.0 B = 2.0 C = 6.1	E = 2.0 G = 2.1 D_{Dr} = 1.1	H = 2.7 K = 2.9 D_{ISO} = 1.6 M = 0.2	16.3
	5-1418760-2	A											
	5-1418760-1	A											
	~~1418760-3~~	~~B~~	~~0.5 - 0.75~~	~~1.4 - 1.9~~	~~CuNiSi~~	~~CuSn0.15/0.2~~	~~TIN PLATED verzinnt~~	~~4 / 3 / TIN PLATED verzinnt~~	~~3~~	~~A = 3.0 B = 2.0 C = 6.1~~	~~E = 2.0 G = 2.1 D_{Dr} = 1.1~~	~~H = 2.7 K = 2.9 D_{ISO} = 1.6 M = 0.2~~	~~16.3~~ Superseded
	~~1418760-2~~	~~C~~											
	~~1418760-1~~	~~B~~											
	5-1418758-3	A	0.25 - 0.35	1.1 - 1.75	CuNiSi	CuSn0.15/0.2	TIN PLATED verzinnt	4 / 3 / TIN PLATED verzinnt	2	A = 2.6 B = 2.0 C = 5.7	E = 1.8 G = 1.8 D_{Dr} = 0.8	H = 2.6 K = 2.6 D_{ISO} = 1.4 M = 0.2	16.3
	5-1418758-2	B											
	5-1418758-1	A											
	~~1418758-3~~	~~A~~	~~0.25 - 0.35~~	~~1.1 - 1.75~~	~~CuNiSi~~	~~CuSn0.15/0.2~~	~~TIN PLATED verzinnt~~	~~4 / 3 / TIN PLATED verzinnt~~	~~4~~	~~A = 2.6 B = 2.0 C = 5.7~~	~~E = 1.8 G = 1.8 D_{Dr} = 0.8~~	~~H = 2.6 K = 2.6 D_{ISO} = 1.4 M = 0.2~~	~~16.3~~ Superseded
	~~1418758-2~~	~~B~~											
	~~1418758-1~~	~~A~~											
	2141864-3	A	6 0.13 - 0.22	0.85 - 1.2	CuNiSi	CuSn0.15/0.2	TIN PLATED verzinnt	4 / 3 / TIN PLATED verzinnt	1	A = 2.5 B = 1.7 C = 5.4	E = 1.5 G = 1.4	H = 2.0 K = 1.9 D_{ISO} = 1.1	15.3
	2141864-2	A											
	2141864-1	A											
INSULATION CRIMP FOR Isolationscrimp fuer	ORDER NO. Bestell-Nr. STRIP Bandware	REV	WIRE RANGE Drahtgroessen-bereich (mm²)	INSULATION-Ø Isolations-Ø (mm)	BODY Kontaktkoerper	TAB Flachstecker	BODY Kontakt-koerper	SPRING Kontaktfeder	DESIGN WIRE-CRIMP Ausfuehrung Draht- Crimp 5	LENGTH Laenge	WIRE CRIMP Drahtcrimp	INSULATION CRIMP Isolations Crimp	DIMENSION Mass "L" (mm)
					MATERIAL Werkstoff		SURFACE Oberflaeche			CRIMP DIMENSION Crimpabmessungen (mm)			

WIRE- CRIMP Draht- Crimp		STANDARD INSULATION CRIMP Standard Isolations-Crimp	SINGLE WIRE CRIMP Einzeldichtungs - Crimp
DESIGN 1 Ausfuehrung 1 5	DESIGN 2-4 Ausfuehrung 2-4 5		

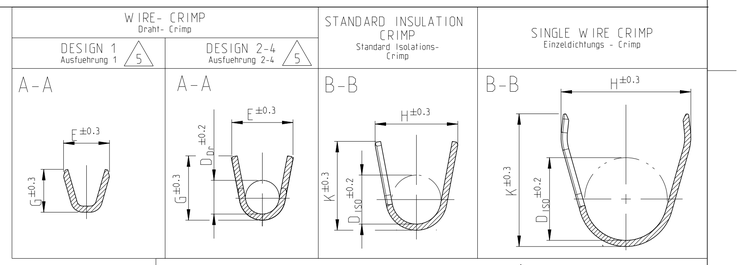

DESIGN WIRE - CRIMP Ausfuehrung Draht - Crimp 5

DESIGN 1 Ausfuehrung 1	DESIGN 2 Ausfuehrung 2	DESIGN 3 Ausfuehrung 3	~~DESIGN 4 Ausfuehrung 4~~

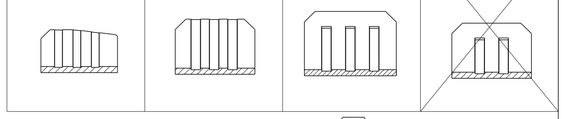

C12

1. LASER WELDED
   Lasergeschweisst
2. REVISION STATUS
   Revisionsstand
3. CONTACT AREA TAB MIN. 0.8µm SELECTIV GOLD OVER Ni
   Kontaktzone selectiv vergoldet min. 0.8µm ueber Ni
4. CONTACT AREA TAB MIN. 2.0µm SELECTIV SILVER
   Kontaktzone selectiv versilbert min. 2.0µm
5. DIFFERENT FORM OF THE SERRATIONS AND WIRE-CRIMP POSSIBLE
   unterschiedliche Ausfuehrung der Rillen und des Draht-Crimps moeglich
6. RELEASED WIRE, SEE APPLICATION SPEC. TE 114-18464
   Freigegebene Leitung, siehe

PRODUCT CHARACTERISTICS ACC. GMP 1.12
BESONDERE MERKMALE NACH GMP 1.12

~~THIS DRAWING IS A CONTROLLED DOCUMENT.~~
DIESES ZEICHNUNGSDOKUMENT IST NICHT KONTROLLIERT.
KENERWAGEN, DIE DAS ZEICHNUNGS FORTSCHRITT EINEN TAG ABWEICHEN.
DIE TATSACHE UEBERTRAGEN WERDEN DIESES DE AUF ANFRAGE

DIMENSIONS: mm

TOLERANCES UNLESS OTHERWISE SPECIFIED:
0 PLC ± -
1 PLC ± -
2 PLC ± -
3 PLC ± -
4 PLC ± -
ANGLES ± 1°
±0.2mm

MATERIAL: SEE TABLE siehe Tabelle
FINISH: SEE TABLE siehe Tabelle

TOLERANCING ISO 8015
TOLERIERUNG ISO 8015

DWN	R. Meier	10MAR03
CHK	U. Muenk	30Jul03
APVD	-	
PRODUCT SPEC	108-18782	
APPLICATION SPEC	114-18464	
WEIGHT	-	

TE Connectivity

NAME: PRODUCT GROUP DRAWING FOR TAB CONTACT 1.2 MM
Produktgruppenzeichnung Flachstecker 1.2mm

SIZE	CAGE CODE	DRAWING NO	RESTRICTED TO
A1	00779	C- 1418754	-

Customer Drawing | SCALE 10:1 | SHEET 1 OF 1 | REV C12

4805 (3/11)

X-ON Electronics

Largest Supplier of Electrical and Electronic Components

Click to view similar products for Automotive Connectors ***category:***

Click to view products by TE Connectivity ***manufacturer:***

Other Similar products are found below :

003-018-000 60403001 60993906-B M902-2131 M902-2161 72.330.1035.1 73.353.4028.0 F119300-B F166900 F258300-B F358300-B F407400 F444110 F487000 F509500B-B 827153-1 8N1515-32-24P 9-1326729-8 925474-1 928905-1 964562-4 968782-1 GT17SA-8DS-HU 98891-1012 98947-1016 12004147 12004475-L 12010290 12010309-B 12015454 12020219-B 12020308 12041318-B 12052225-L 12052466 12059125 12064869 12004327-B 12010503-B 12015308 12015384 12015909 1-21030-1 12041254 12041318 12047946-B 12047957 12047957-L 12059473 12066261