THIS DRAWING IS UNPUBLISHED. RELEASED FOR PUBLICATION -,- .
© COPYRIGHT 2011 BY TYCO ELECTRONICS CORPORATION. ALL RIGHTS RESERVED.

LOC	DIST
DW	—

REVISIONS

P	LTR	DESCRIPTION	DATE	DWN	APVD
	A	REVISED (ECR-10-026339)	23MAY'11	J.C.	W.K.

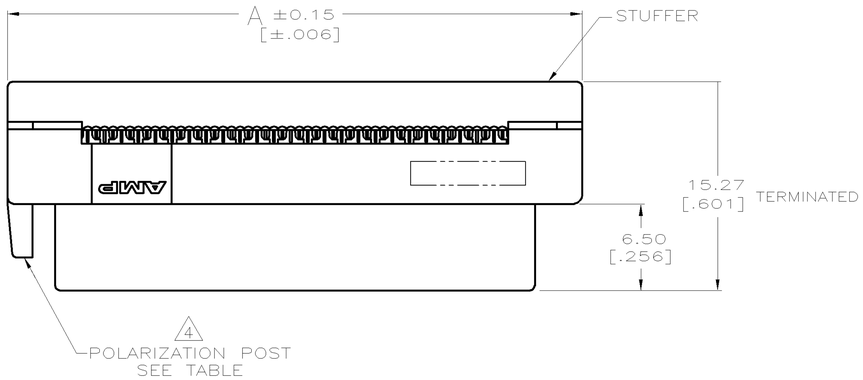

1. HOUSING AND COVER– POLYESTER, BLACK, 94V–0.
2. CONNECTOR WILL TERMINATE .63 [.025] CENTERLINE FLAT RIBBON CABLE, #30 AWG SOLID,PVC INSULATION.
3. DIMENSIONS SHOWN ARE MAXIMUM UNLESS OTHERWISE SPECIFIED.
4. REQUIRED FOR POLARIZATION OF RIBBON CABLE EDGE CONNECTOR TO P.C. BOARD.
5. CONNECTOR WILL ACCOMODATE PRINTED CIRCUIT BOARD THICKNESS OF 1.42–1.72 [.056–.068].
6. ALL P/NS ARE PACKAGED IN TUBES, THEY ARE THE SAME PRODUCT AS 787693–2, –4, –5, –3, –6, –1 RESPECTIVELY, WHICH ARE PACKAGED IN TRAYS.
7. TERMINALS–PHOSPHOR BRONZE WITH GOLD FLASH OVER 0.76μm [.000030] MINIMUM PALLADIUM–NICKEL IN CONTACT AREA AND 3.81μm [.000150] MINIMUM TIN ON TERMINATING AREA, ALL OVER 1.27μm [.000050] MINIMUM NICKEL.
8. LEAD CONTENT: 1000 PPM UNDER.
9. ALL DIMENSIONS SHOWN ARE MAXIMUM UNLESS OTHERWISE SPECIFIED.

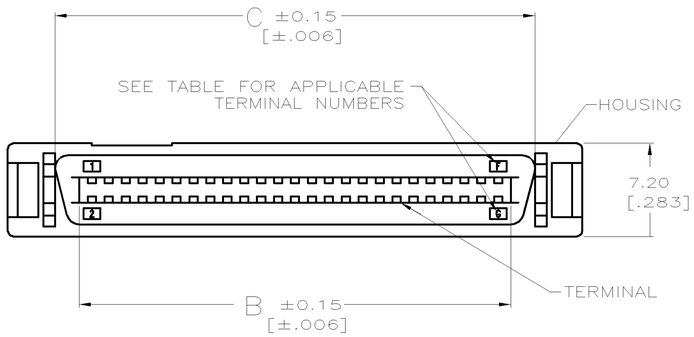

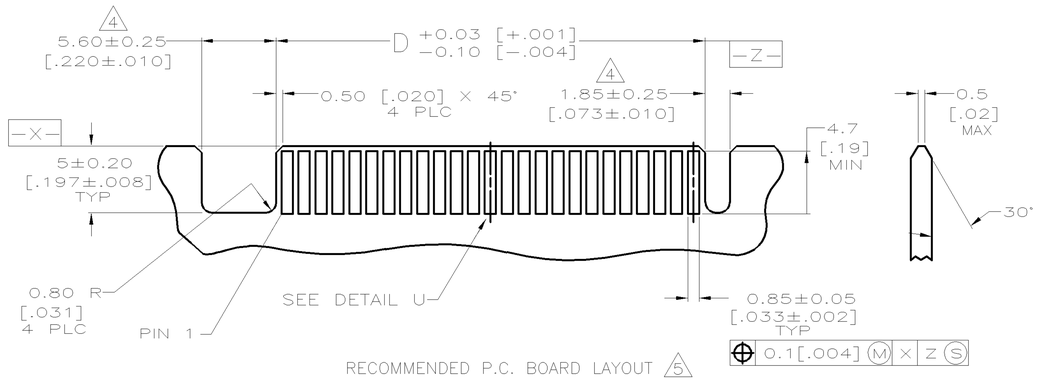

G	F	D	C	B	A	NO OF POSN	PART NUMBER
100	99	63.93 [2.517]	67.77 [2.668]	64.13 [2.525]	74.85 [2.947]	100	1–1734098–0
80	79	51.23 [2.017]	55.07 [2.168]	51.43 [2.025]	62.15 [2.447]	80	1734098–8
68	67	43.61 [1.717]	47.45 [1.868]	43.81 [1.725]	54.53 [2.147]	68	1734098–7
60	59	38.53 [1.517]	42.37 [1.668]	38.73 [1.525]	49.45 [1.947]	60	1734098–6
50	49	32.18 [1.267]	36.02 [1.418]	32.38 [1.275]	43.10 [1.697]	50	1734098–5
40	39	25.70 [1.012]	29.67 [1.168]	26.03 [1.025]	36.75 [1.447]	40	1734098–4

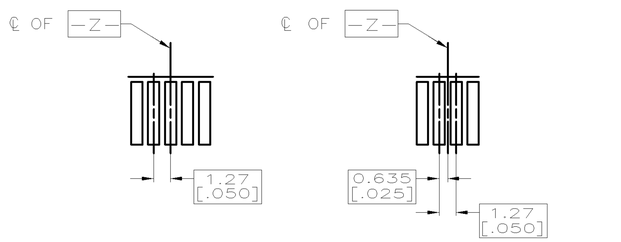

DETAIL U

THIS DRAWING IS A CONTROLLED DOCUMENT.

DIMENSIONS: mm

TOLERANCES UNLESS OTHERWISE SPECIFIED:
0 PLC ±–
1 PLC ±–
2 PLC ±–
3 PLC ±–
4 PLC ±–
ANGLES ±–
9

MATERIAL: SEE NOTE
FINISH: SEE NOTE

DWN O. HU 26MAR2004
CHK S. HOU 26MAR2004
APVD T. KE 26MAR2004
PRODUCT SPEC 108–57896
APPLICATION SPEC —
WEIGHT —

TE Connectivity

NAME: RCPT, ASSY, RIBBON CABLE, .025CL, CHAMP .050, SERIES I

SIZE A3 | CAGE CODE 00779 | DRAWING NO C–1734098 | RESTRICTED TO —

CUSTOMER DRAWING | SCALE — | SHEET 1 OF 2 | REV A

THIS DRAWING IS UNPUBLISHED. RELEASED FOR PUBLICATION -,- .
© COPYRIGHT 2011 BY TYCO ELECTRONICS CORPORATION. ALL RIGHTS RESERVED.

LOC	DIST
DW	—

REVISIONS

P	LTR	DESCRIPTION	DATE	DWN	APVD
		SEE SHEET 1.			

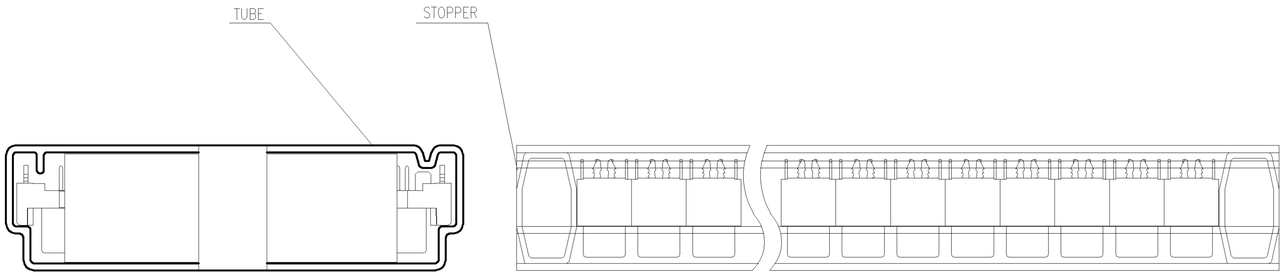

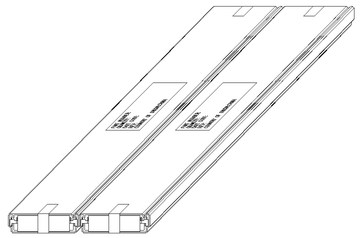

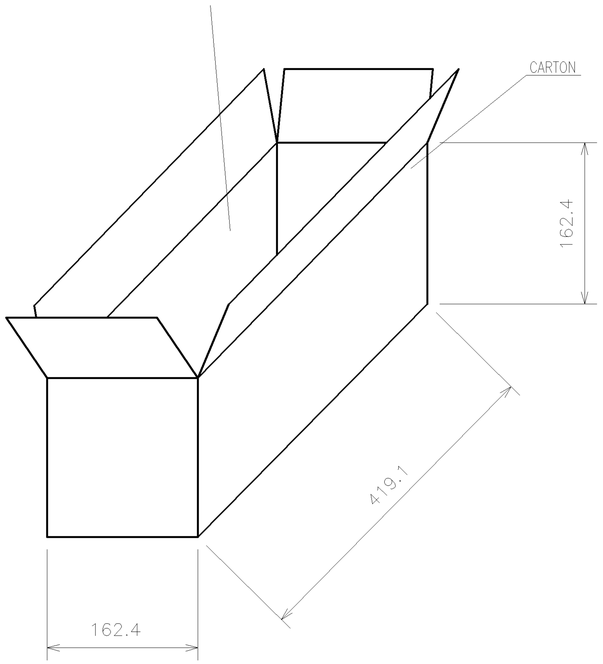

POS.	Q'TY/ TUBE	TUBE/ BOX	Q'TY/ BOX	N/W (KG)	G/W (KG)	PART NUMBER
100	50	6	300	2.67	3.62	1-1734098-0
80	50	12	600	4.44	5.84	1734098-8
68	50	12	600	3.84	5.27	1734098-7
60	50	12	600	3.46	4.72	1734098-6
50	50	12	600	2.94	4.10	1734098-5
40	50	18	900	3.69	5.10	1734098-4

THIS DRAWING IS A CONTROLLED DOCUMENT.

DIMENSIONS: mm

TOLERANCES UNLESS OTHERWISE SPECIFIED:
0 PLC ± –
1 PLC ± –
2 PLC ± –
3 PLC ± –
4 PLC ± –
ANGLES ± –

MATERIAL –

FINISH –

DWN –
CHK –
APVD –
PRODUCT SPEC –
APPLICATION SPEC –
WEIGHT –

TE Connectivity

NAME
RCPT, ASSY, RIBBON CABLE, .025CL, CHAMP .050, SERIES I

SIZE	CAGE CODE	DRAWING NO	RESTRICTED TO
A3	00779	C-1734098	—

CUSTOMER DRAWING

SCALE	SHEET	REV
—	2 OF 2	A

X-ON Electronics

Largest Supplier of Electrical and Electronic Components

Click to view similar products for Board to Board & Mezzanine Connectors ***category:***

Click to view products by TE Connectivity ***manufacturer:***

Other Similar products are found below :

589158040000018 MDF7C-18P-2.54DSA(55) FCN-230C068-11 FCN-268F012-G/BD FCN-268F036-G/BD FCN-268M012-G/0D FCN-268M024-G/1D FCN-723J004/1 MIS-048-01-F-D-DP-K 832-10-034-10-001000 FX4C-80S-1.27DSA FCN-214Q030-G/0 FCN-234P048-G/0 FCN-235D050-G/C 210-93-314-41-105000 2-22603-0 MDF7-40DP-2.54DSA(55) AXG720047 5031084030 MIT-114-03-F-D-K 55323-1519 DF33-2P-3.3DSA(24) YFT-20-05-H-03-SB-K 503308-3040 026-6203-PDB 027-6203-PDB 069159702701000 10123981-102LF 101A10019X 55650-0588-C 68682-310LF 68684-306 75140-7012 87471-650 194261-1 FCN-268F024-G0D 10124054-515LF 68685-603 8-1616154-3 MIS-019-01-F-D FCN-268M024-G/3D 20021832-06016C1LF KX15-20KLDL-E1000E MDF7-16DP-2.54DSA(55) AXE810124 FCN-214J100-G/0 FCN-230C068-E/S AXE812124 AXE816124 AXE720127