THIS DRAWING IS UNPUBLISHED. RELEASED FOR PUBLICATION -,- .
© COPYRIGHT 2011 BY TYCO ELECTRONICS CORPORATION. ALL RIGHTS RESERVED.

LOC	DIST
DW	—

REVISIONS

P	LTR	DESCRIPTION	DATE	DWN	APVD
	B	REVISED (ECR-12-008086) REVISED CAVITY DEPTH OF PACKAGE TO 7.0mm	02MAY'12	E.L.	W.K.

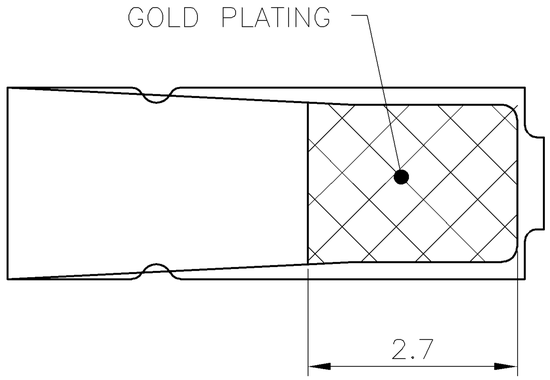

NOTES :

1. MATERIAL :
   COPPER ALLOY, 0.15±0.01MM THK
2. FINISH :
   GOLD FLASH PLATING ON THE CONTACT AREA.
   2.54um[100u"] MIN. MATTE-TIN PLATING ON THE FOOT AREA.
   1.27um[50u"] NICKEL UNDERPLATING OVERALL.
3. REFLOW SOLDER CAPABLE TO 260°C
   PER TE SPEC. 109-201, CONDITION B.

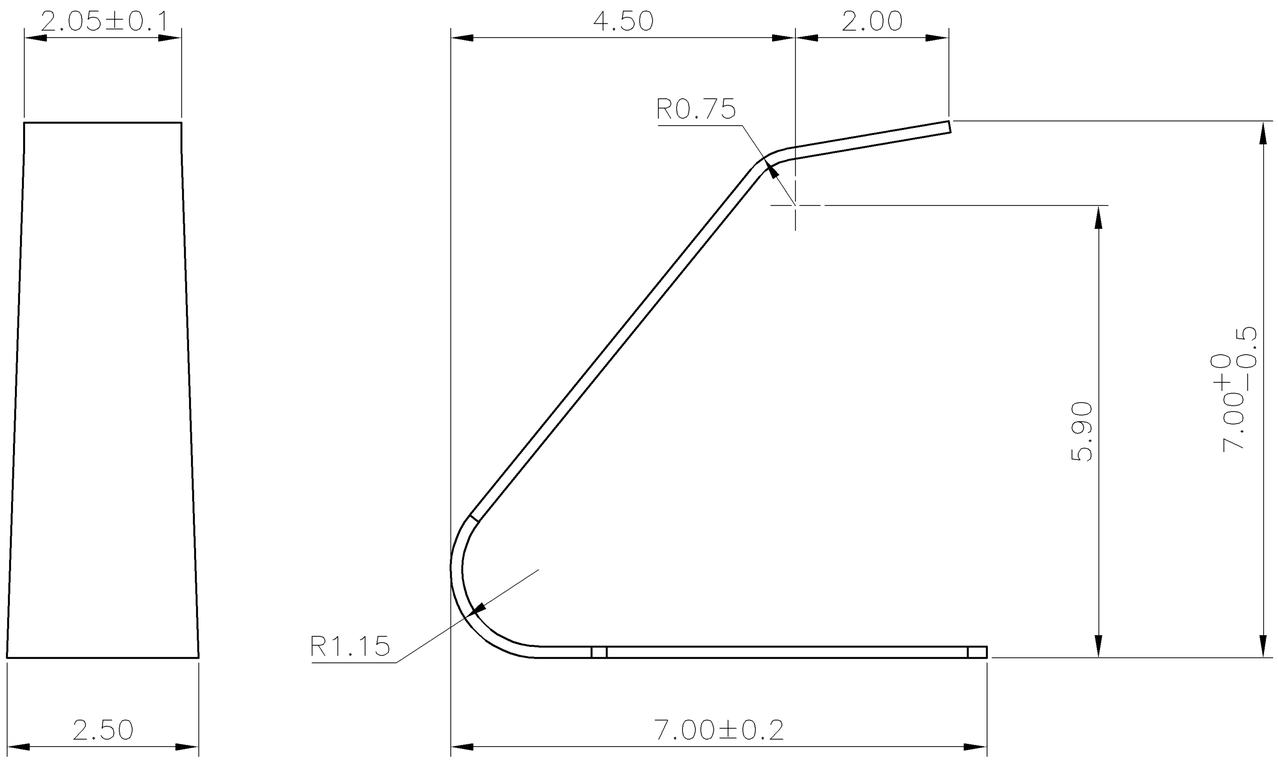

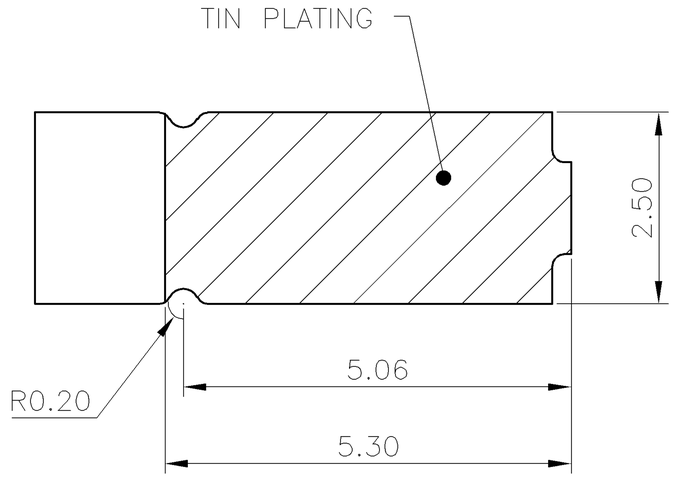

RECOMMENDED FOOT PRINT
REFERENCE ONLY

1734298-1
PART NUMBER

THIS DRAWING IS A CONTROLLED DOCUMENT.

DIMENSIONS: mm

TOLERANCES UNLESS OTHERWISE SPECIFIED:

0 PLC	± –
1 PLC	± 0.3
2 PLC	± 0.2
3 PLC	± 0.15
4 PLC	± –
ANGLES	± 3°

MATERIAL: SEE NOTE
FINISH: SEE NOTE

DWN E. LIU 24JUN2009
CHK S. CHIEN 24JUN2009
APVD W. KODAMA 24JUN2009
PRODUCT SPEC 108-57765
APPLICATION SPEC —
WEIGHT 0.0005 GRAMS

TE Connectivity

NAME: SHIELD FINGER 6525

SIZE	CAGE CODE	DRAWING NO	RESTRICTED TO
A3	00779	C-1734298	—

CUSTOMER DRAWING | SCALE — | SHEET 1 OF 2 | REV B

THIS DRAWING IS UNPUBLISHED. RELEASED FOR PUBLICATION -,- .
© COPYRIGHT 2011 BY TYCO ELECTRONICS CORPORATION. ALL RIGHTS RESERVED.

LOC	DIST
DW	—

REVISIONS

P	LTR	DESCRIPTION	DATE	DWN	APVD
		SEE SHEET 1.			

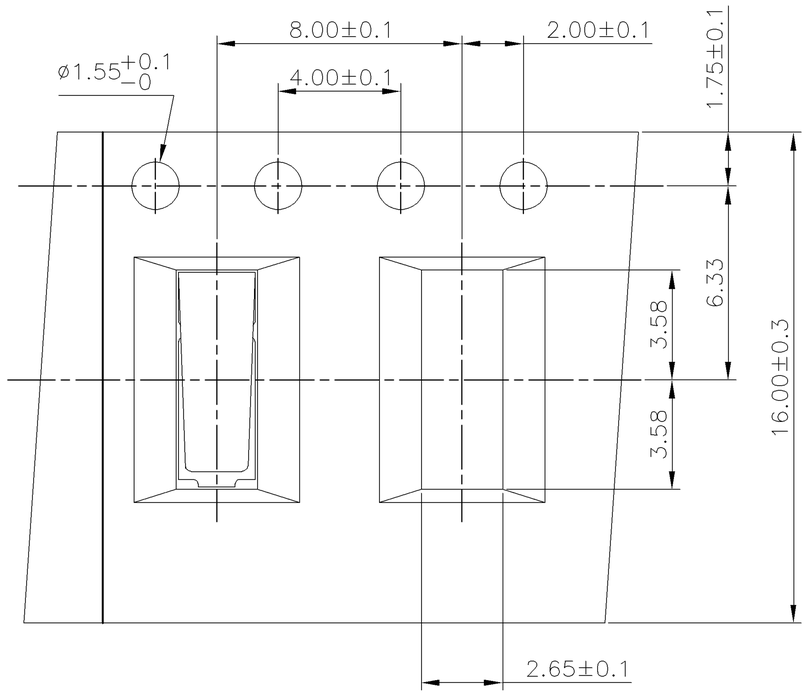

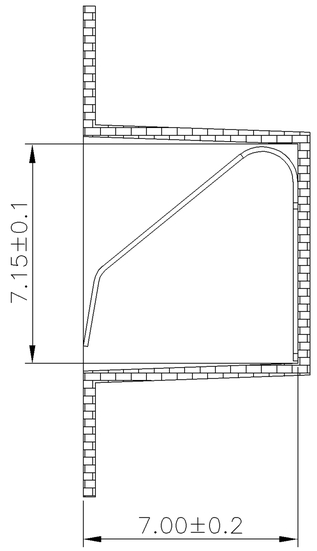

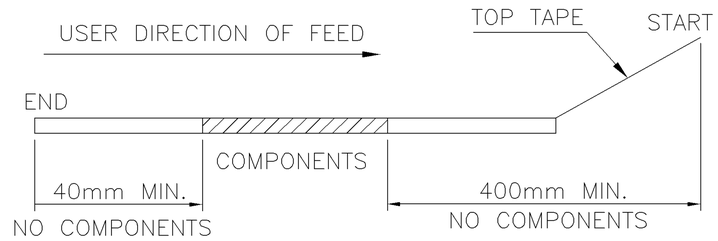

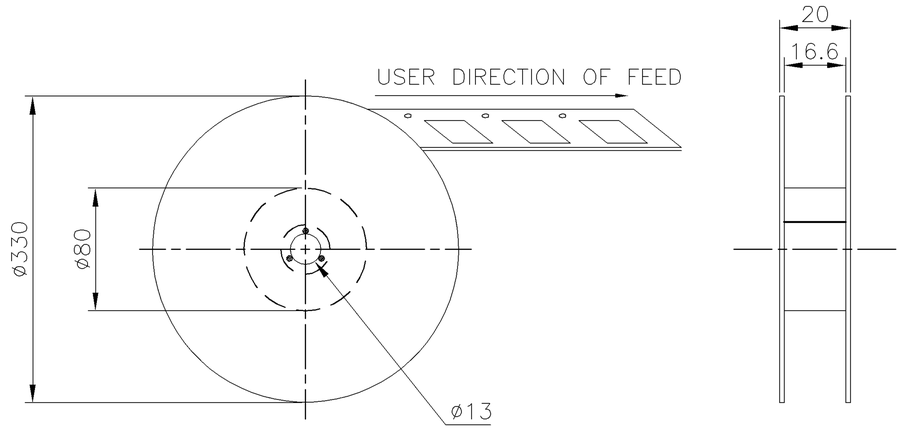

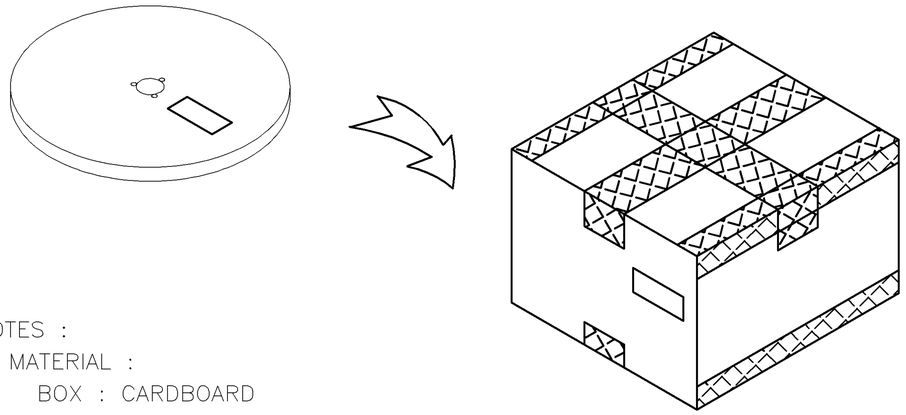

NOTES :
1. MATERIAL :
   BOX : CARDBOARD
   CARRIER TAPE : PS
   TOP TAPE : PET
   REEL : PS
2. DIMENSION :
   REEL : SEE DRAWING
   BOX : 345X345X240
3. QUANTITY : SEE TABLE
4. WEIGHT : SEE TABLE
5. PEELING RESISTANCE : 10g~70g
6. PEELING SPEED : 300mm/MINUTES

5.61Kg	0.062Kg	1200	10	12000 PCS
GROSS WEIGHT	NET WEIGHT	PCS/REEI	REEI /CARTON	QUANTITY

THIS DRAWING IS A CONTROLLED DOCUMENT.

DIMENSIONS: mm

TOLERANCES UNLESS OTHERWISE SPECIFIED:

0 PLC	± –
1 PLC	± 0.3
2 PLC	± 0.2
3 PLC	± 0.15
4 PLC	± –
ANGLES	± 3°

MATERIAL –

FINISH –

DWN –
CHK –
APVD –
PRODUCT SPEC –
APPLICATION SPEC –
WEIGHT –

TE Connectivity

NAME: SHIELD FINGER 6525

SIZE	CAGE CODE	DRAWING NO	RESTRICTED TO
A3	00779	C-1734298	—

CUSTOMER DRAWING | SCALE — | SHEET 2 OF 2 | REV B

X-ON Electronics

Largest Supplier of Electrical and Electronic Components

Click to view similar products for EMI Gaskets, Sheets, Absorbers & Shielding ***category:***

Click to view products by TE Connectivity ***manufacturer:***

Other Similar products are found below :

23-76FSC-SN-24 2-1616323-1 4-1616259-0 3013350A 46J8501020.NN00 3013310A 3013325A 3013308A 3020604 55005106 3021302 3031313 67SLH050050025PI00 3021310 0137131400 6-34UT-070-BD-16 303076048 46J5N03020.NN00 30206025 260737 30395641 3030403 3690103020 HNY-LT15CU4241 46X7503020.NN00 46X7501020.NN00 46W5E02520.NN00 46W5E01520.NN00 302095032 30207032 30210005 46J5N02520.NN00 3021213 3020804 3021004 74273711 74273704 33403 3031210 3031008 3031004 3030903 30308055 303076016 303045018 303035015 3029564 3025602 3023502 3022303