THIS DRAWING IS UNPUBLISHED. RELEASED FOR PUBLICATION -,- .
© COPYRIGHT - By - ALL RIGHTS RESERVED.

LOC	DIST
GP	00

REVISIONS

P	LTR	DESCRIPTION	DATE	DWN	APVD
	M	REVISED PER ECO-13-012013	09AUG2013	CJV	CWR

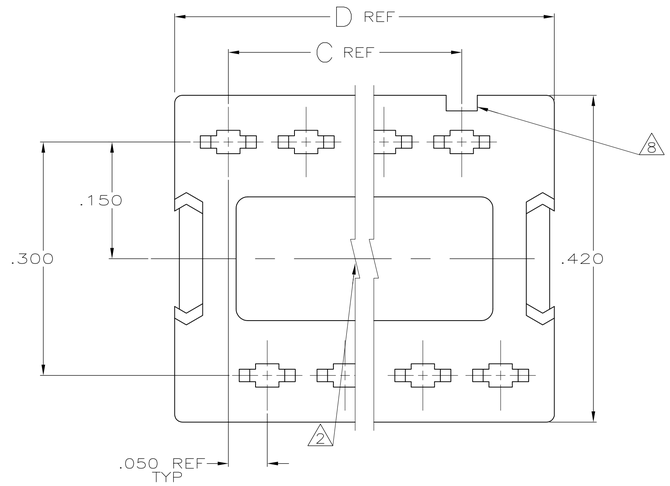

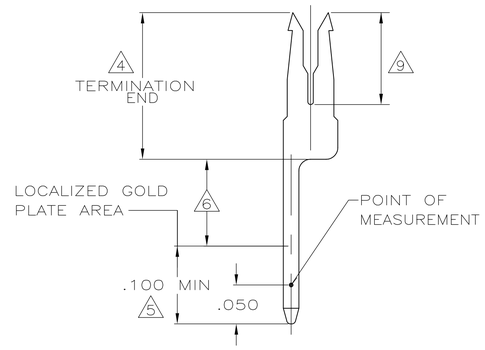

DETAIL Z

1. CONTACTS DESIGNED FOR 26 & 28 AWG STRANDED OR 26, 28 & 30 AWG SOLID WIRE.
2. AMP TRADEMARK LOCATED IN APPROX AREA SHOWN.
3. STANDOFFS: POSN 8 (2) STANDOFFS AS SHOWN.
   POSN 14-20 (3) STANDOFFS, (1) CENTERED BETWEEN (2) SHOWN
4. PLATED WITH .000100 - .000200 BRIGHT TIN LEAD OVER .000050 NICKEL.
5. PLATED WITH .000030 GOLD OVER .000050 NICKEL.
6. GOLD FLASH OVER .000050 NICKEL.
7. HEIGHT AFTER TERMINATION IS .253 REF.
8. INDICATES NO 1 POSITION.
9. PLATED WITH .000005 MIN GOLD IN IDC AREA OVER .000050 MIN NICKEL.
10. MOLDED PARTS: 94V-0 RATED THERMOPLASTIC, COLOR BLACK. CONTACTS: PHOS BRONZE.

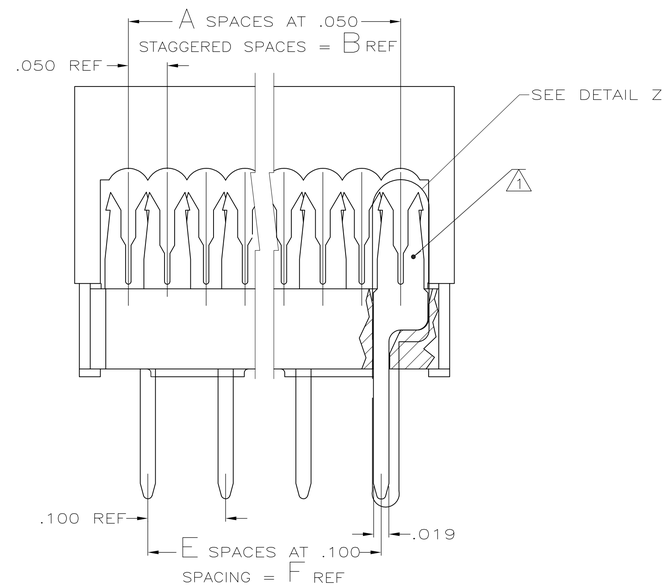

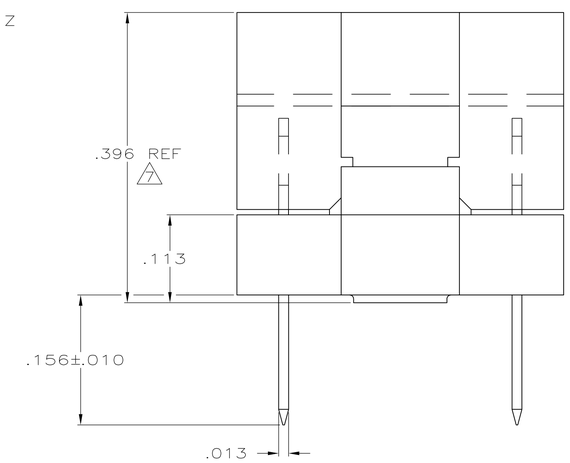

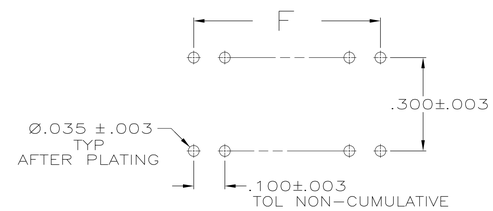

RECOMMENDED HOLE LAYOUT

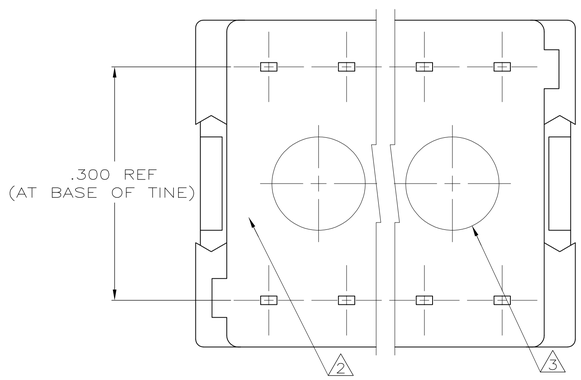

	9	5	6	.900	9	1.088	.900	.950	19	20	1-746611-0
	9	5	6	.800	8	.988	.800	.850	17	18	-9
	9	5	6	.600	6	.788	.600	.650	13	14	-8
	9	5	6	.300	3	.488	.300	.350	7	8	-7
	9	5	6	.700	7	.888	.700	.750	15	16	-6
OBSOLETE	4	5	6	.900	9	1.088	.900	.950	19	20	-5
OBSOLETE	4	5	6	.800	8	.988	.800	.850	17	18	-4
OBSOLETE	4	5	6	.700	7	.888	.700	.750	15	16	-3
OBSOLETE	4	5	6	.600	6	.788	.600	.650	13	14	-2
OBSOLETE	4	5	6	.300	3	.488	.300	.350	7	8	746611-1
	CONTACT FINISH			F	E	D	C	B	A	NO OF POSN	PART NO

THIS DRAWING IS A CONTROLLED DOCUMENT.

DIMENSIONS: INCHES

TOLERANCES UNLESS OTHERWISE SPECIFIED:
0 PLC ± -
1 PLC ± -
2 PLC ± -
3 PLC ± .005
4 PLC ± -
ANGLES ± -

MATERIAL 10
FINISH CONTACTS: SEE TABLE

DWN L. VARELA - DOCK5 11-29-04
CHK C. ROHDE 11-29-04
APVD M. WALMSLEY 11-29-04
PRODUCT SPEC 108-40013
APPLICATION SPEC 114-40005
WEIGHT -

TE Connectivity

NAME KIT, AMP-LATCH DIP PLUG, PREASSEMBLED .100 X .300 CENTERS, 30 GOLD DUPLEX CONTACTS

SIZE	CAGE CODE	DRAWING NO	RESTRICTED TO
A1	00779	C-746611	-

CUSTOMER DRAWING | SCALE 10:1 | SHEET 1 OF 1 | REV M

X-ON Electronics

Largest Supplier of Electrical and Electronic Components

Click to view similar products for Headers & Wire Housings ***category:***

Click to view products by TE Connectivity ***manufacturer:***

Other Similar products are found below :

892-18-020-10-001101 58102-G61-06LF 582553-1 0009485154 009176003701906 0050291907 LY20-4P-DT1-P1E-BR 02.125.8002.8 609-3404 61062-3 61082-181009 622-3653LF 63453-116 636-1030 636-1427 636-3427 636-4007 641938-9 641991-4 644827-2 65817-010LF 65817-015LF 65863-015LF 66207-023LF 67095-007LF 67601157 68645-018 68648-049 70.362.1628.0 70-4210 70-4226B 70-4853B 707-5020 707-5028 71.350.2428.0 71918-208LF 71961-016LF 733-134 733-162 754199-000 760-3052 787-8014-00 79531-3000 FCN-360C032-B FCN-367T-T012/H FCN-723D010/2 80.063.4001.1 800-90-001-10-001000 800-90-010-10-002000 801-43-002-10-013000