DRAWING MADE IN THIRD ANGLE PROJECTION
THIS DRAWING IS UNPUBLISHED. RELEASED FOR PUBLICATION .19 .
© COPYRIGHT 19 BY AMP INCORPORATED. ALL INTERNATIONAL RIGHTS RESERVED.

LOC	DIST
G	00

REVISIONS				
ZONE	LTR	DESCRIPTION	DATE	APPD
	O	INITIAL RELEASE	–	–
	A	0.00070 WAS 0.00127	02/12/97	KW/EO
	B	REV PER ECN 98-4072-025	06/08/98	MM

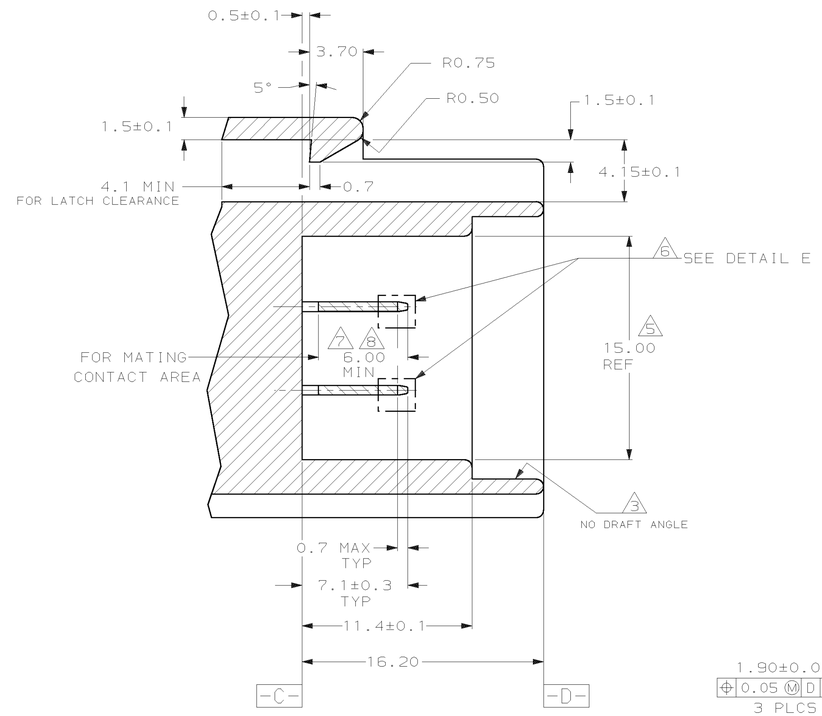

SECTION A–A
SCALE 5:1

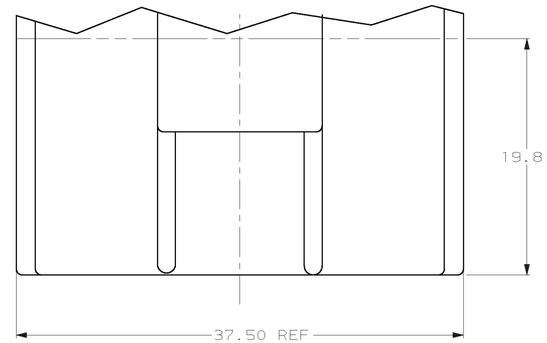

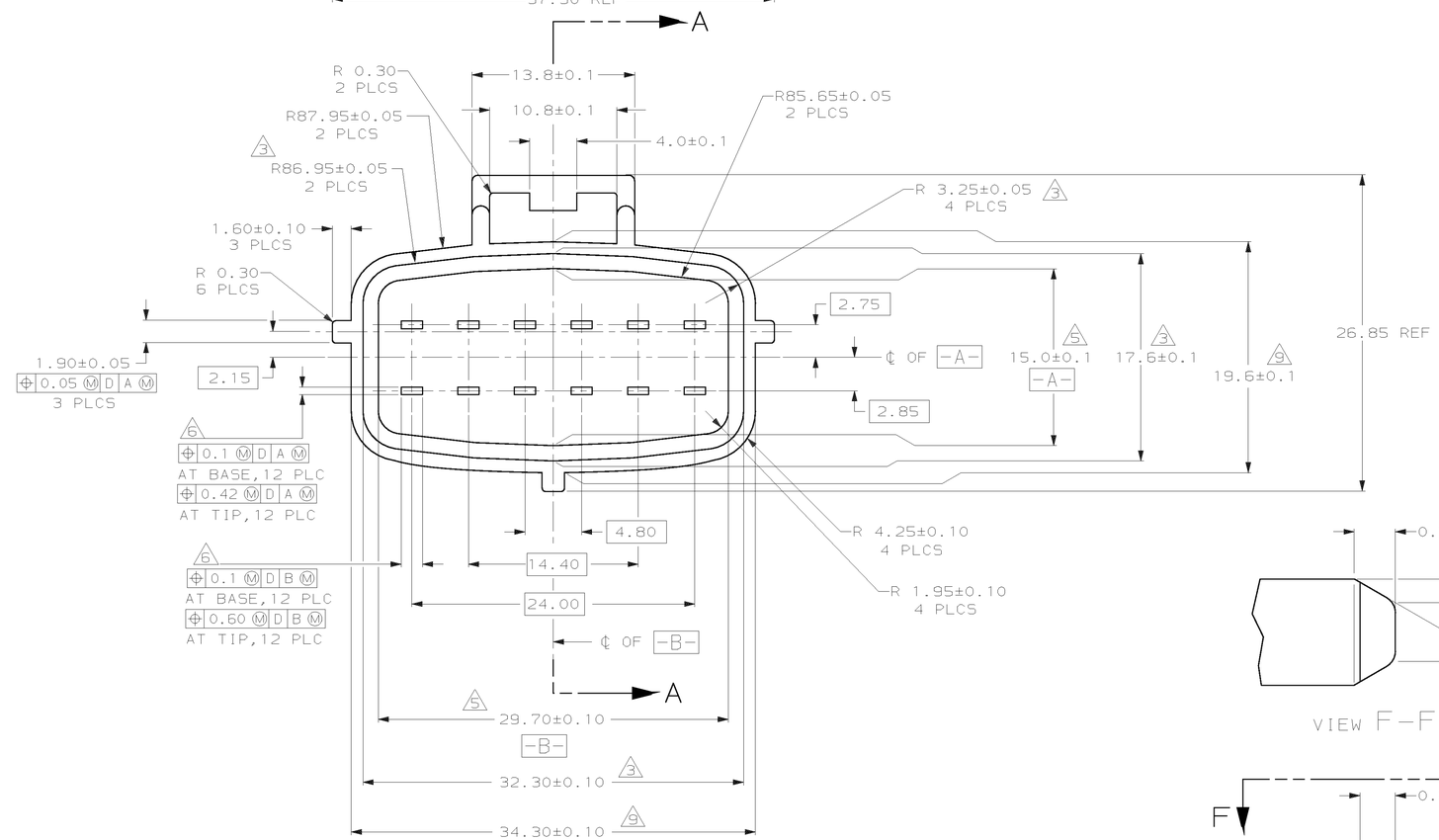

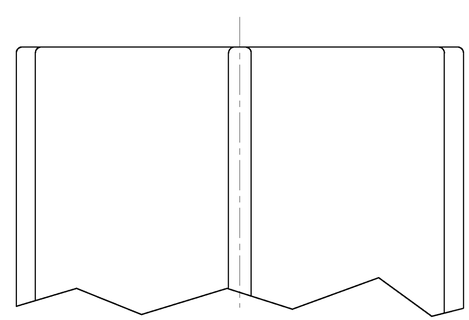

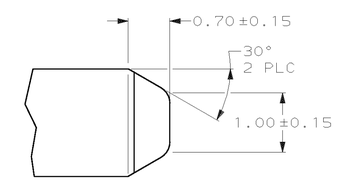

VIEW F–F

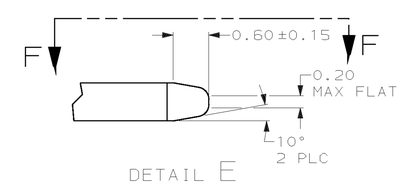

DETAIL E
SCALE 20:1

NOTES

1. 1.2° MAX DRAFT ANGLE, EXCEPT AS INDICATED.
2. WARPAGE 0.10 MAX, FLASH 0.15 MAX.
3. SURFACE DEFECTS ARE NOT ACCEPTABLE AS FOLLOWS: HAIRCRACKS, STAINS, SCORES, TOOL LINES AND WITNESS LINES.
4. ALL RADII ARE 0.50, EXCEPT AS INDICATED.
5. DIMENSION TO BE MAINTAINED OVER 3.00 LENGTH FROM -C- TOWARDS -D- .
6. 0.640±0.025 THICK X 1.8±0.1 WIDE CONTACTS LOCATED AS SHOWN, 12 PLACES. BURR FREE LEAD-IN TO PREVENT STUBBING OR SCRAPING.
7. FINISH: 0.0020 MIN THICK NICKEL UNDERPLATE WITH EITHER 0.00076 MIN THICK GOLD OR 0.0038/0.0076 THICK TIN IN MATING AREA WITH NO EXPOSED EDGES.
8. NO TOOL MARKS IN THIS AREA.
9. DIMENSION TO BE MAINTAINED OVER 2.00 LENGTH FROM -D- TOWARDS -C- .

THIS DRAWING DEFINES THE DIMENSIONAL INTERFACE REQUIREMENTS NECESSARY FOR DEVELOPING AN INSERT MOLDED CONNECTION TO MATE WITH SEALED PLUG CONNECTORS PROVIDED BY AMP INCORPORATED.

THIS DRAWING IS A CONTROLLED DOCUMENT FOR AMP INCORPORATED. IT IS SUBJECT TO CHANGE AND THE CONTROLLING ENGINEERING ORGANIZATION SHOULD BE CONTACTED FOR THE LATEST REVISION.

PART NO: 93-4072-006-1

DO NOT SCALE PRINT.
UNLESS SPECIFIED
DIMENSIONS IN mm
TOLERANCES ON :
2 PLC DEC ± 0.15
3 PLC DEC ± -
ANGLES ± 1°

MATERIAL: APPROPRIATE MATERIAL FOR INDIVIDUAL APPLICATION

FINISH 7

DR 1/4/94 KD LYTLE
CHK 1/8/94 JP KUNKLE
APPD – –
APPD – –
PRODUCT SPEC –
APPLICATION SPEC –
WEIGHT –

AMP Incorporated
Harrisburg, PA 17105-3608

NAME: INTERFACE DRAWING, 12 POSITION, E-J II+ CONNECTOR

SIZE D | CAGE CODE 00779 | DRAWING NO C-93-4072-006
SCALE 4:1 | SHEET 1 OF 1

CUSTOMER DRAWING

X-ON Electronics

Largest Supplier of Electrical and Electronic Components

Click to view similar products for Automotive Connectors ***category:***

Click to view products by TE Connectivity ***manufacturer:***

Other Similar products are found below :

003-018-000 60403001 60993906-B M902-2131 M902-2161 M902-2344 72.330.1035.1 73.353.4028.0 F119300-B F166900 F258300-B F358300-B F407400 F444110 F487000 F509500B-B 827153-1 8N1515-32-24P 9-1326729-8 925474-1 928905-1 964562-4 968782-1 GT17SA-8DS-HU 98891-1012 98947-1016 12004147 12004475-L 12010290 12010309-B 12015454 12020219-B 12041318-B 12052225-L 12052466 12064869 12004327-B 12015308 12015384 12015909 1-21030-1 12041254 12041318 12047946-B 12047957 12047957-L 12059473 12066261 12110546 12110546-B