THIS DRAWING IS UNPUBLISHED. RELEASED FOR PUBLICATION -
© COPYRIGHT copyright_date BY - ALL RIGHTS RESERVED.

STANDARDCRIMP

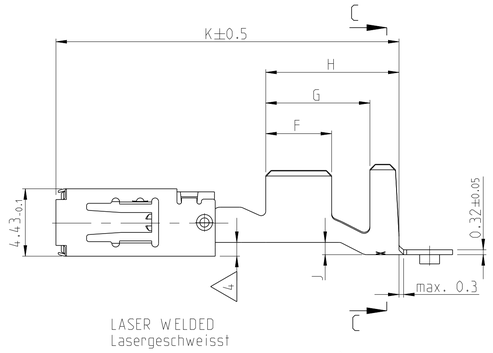

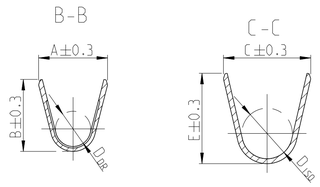

LASER WELDED
Lasergeschweisst

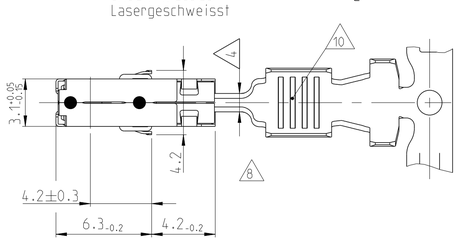

SERRATION DESIGN
Serration Ausfuehrung (F14)

DESIGN / Ausfuehrung
0.5 - 1.0mm²

DESIGN / Ausfuehrung
0.2 - 0.5mm²
1.5 - 2.5mm²
12 AWG

DESIGN / Ausfuehrung
4.0mm²

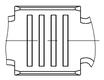

SINGLE WIRE SEAL
Einzeldichtungssystem

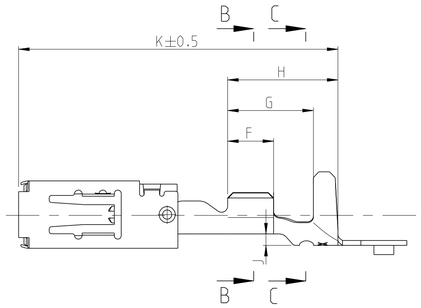

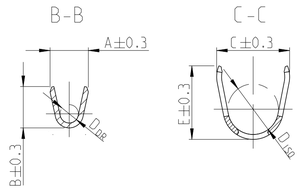

REVISIONS

P	LTR	DESCRIPTION	DATE	DWN	APVD
	J11	NOTE 8 ADDED. TABLE UPDATE WITH PNs 1-...-4	17MAY2017	MAH.	SBEC
	J12	PNs 1-968855-4. 1-968857-4. 1-968859-4 OBSOLETE ON DRW.	05MAR2018	MAH.	SBEC
	J13	Added PN 2-968851-3. 2-968853-3 2-968857-3 and 2-968859-3	07MAI2018	FRAN	BECK
	J14	Obsolete PN 1-968882-1/-2/-3: PN 1-968880-1/-3	11NOV2020	FRAN	BECK

VERSION Ausfuehrung	ORDER-NO. STRIP-FORM Bestell-Nr. Bandware	REV	BODY Werkstoff	SPRING Werkstoff	SURFACE Oberflaeche (2)	WIRE SIZE RANGE Leiter-quer-schnitt mm²	INSULATION DIAMETER Isolations-durchmesser mm	A	B	D_{DR}	C	E	D_{ISO}	F	G	H	J	K	WEIGHT Gewicht g	SINGLE WIRE SEAL Einzeldichtung TE CONNECTIVITY NO.	DEAD END PLUG Blindstopfen TE CONNECTIVITY NO.	APPLICATION TOOLS Verarbeitungswerkzeuge
								WIRE CRIMP Drahtcrimp			INSULATION CRIMP Isolationscrimp											
								STRIP FORM Bandware														
								CRIMP DIMENSIONS / Crimpabmessungen mm														
SINGLE WIRE SEAL / Einzeldichtung	1-1719506-3	A	CuNiSi	X10CrNi18-8	SILVER PLATED versilbert	12 AWG	3.0 - 3.8	4.0	4.2	2.0	5.0	5.0	3.5	3.5	5.9	7.5	0.8	21.0	0.59	828905-1	828922-1	
	1-1719506-1	A			PRE TIN PLATED verzinnt																	
	(8) 2-968859-3	D			SILVER PLATED versilbert	4	3.4 - 3.7	4.5	4.7	2.3	6.0	6.0	4.3	4.3	7.0	8.5	1.25	22.6	0.65	828985-1	828986-1	
	1-968859-3	E			SILVER PLATED versilbert																	
	1-968859-1	E			PRE TIN PLATED verzinnt																	
	(8) 2-968857-3	B			SILVER PLATED versilbert	1.5 - 2.5	2.2 - 3.0	3.6	3.8	1.7	5.0	5.0	3.5	3.5	6.0	7.6	0.8	21.0	0.58	828905-1	828922-1	
	1-968857-3	E			SILVER PLATED versilbert																	
	1-968857-2	D			GOLD PLATED vergoldet																	
	1-968857-1	E			PRE TIN PLATED verzinnt																	
	1-968855-3	E			SILVER PLATED versilbert	0.5 - 1.0	1.4 - 2.1	2.5	2.7	1.2	4.8	4.8	3.3	3.0	5.6	7.2	0.75	21.0	0.54	828904-1	828922-1	
	1-968855-2	E			GOLD PLATED vergoldet																	
	1-968855-1	E			PRE TIN PLATED verzinnt																	
	1-2141859-3	A			SILVER PLATED versilbert	0.2 - 0.5	1.2 - 1.4	2.4	2.3	1.0	4.5	4.5	3.2	2.5	5.1	6.7	0.75	21.0	0.52	828904-1	828922-1	
	1-2141859-2	A			GOLD PLATED vergoldet																	
	1-2141859-1	A			PRE TIN PLATED verzinnt																	
F14	(9) 1-968882-3	E			SILVER PLATED versilbert	0.2 - 0.5	1.2 - 1.4	2.1	2.1	0.8	4.5	4.5	3.2	2.5	5.1	6.7	0.75	21.0	0.52	828904-1	828922-1	
F14	(9) 1-968882-2	E			GOLD PLATED vergoldet																	
F14	(9) 1-968882-1	E			PRE TIN PLATED verzinnt																	
STANDARDCRIMP	(8) 2-968853-3	D			SILVER PLATED versilbert	4	2.7 - 3.7	4.5	4.7	2.3	5.7	5.9	3.3	4.3	6.8	8.7	0.8	22.6	0.65	-	-	
	1-968853-3	E			SILVER PLATED versilbert																	
	1-968853-1	E			PRE TIN PLATED verzinnt																	
	(8) 2-968851-3	D			SILVER PLATED versilbert	1.5 - 2.5	2.2 - 3.0	3.6	3.8	1.7	4.6	5.0 (F14)	2.6	3.5	5.1	6.7	0.3	20.2	0.56	-	-	
	1-968851-3	E			SILVER PLATED versilbert																	
	1-968851-2	E			GOLD PLATED vergoldet																	
	1-968851-1	E			PRE TIN PLATED verzinnt																	
	1-968849-3	E			SILVER PLATED versilbert	0.5 - 1.0	1.4 - 2.1	2.5	2.7	1.2	3.3	3.5	1.8	3.0	4.6	6.2	0.2	20.2	0.51	-	-	
	1-968849-2	E			GOLD PLATED vergoldet																	
	1-968849-1	E			PRE TIN PLATED verzinnt																	
	1-2141857-3	A			SILVER PLATED versilbert	0.2 - 0.5	1.2 - 1.4	2.4	2.3	1.0	2.9	2.9	1.4	2.5	3.8	5.7	0.2	20.2	0.48	-	-	
	1-2141857-1	A			PRE TIN PLATED verzinnt																	
F14	(9) 1-968880-3	E			SILVER PLATED versilbert	0.2 - 0.5	1.2 - 1.4	2.1	2.1	0.8	2.9	2.9	1.4	2.5	3.8	5.7	0.2	20.2	0.48	-	-	
F14	(9) 1-968880-1	E			PRE TIN PLATED verzinnt																	

APPLICATION TOOLS Verarbeitungswerkzeuge: SEE APPLICATION SPECIFICATION 114-18148
siehe Verarbeitungsspezifikation 114-18148

NOTES:
Bemerkungen:

1 MATING PART SEE INTERFACE DRAWING
TE-NO.: 114-18230-002
Gegenstecker nach Ausfuehrungsvorschrift
TE-Nr.: 114-18230-002

(2) SURFACE:
- PRE TIN PLATED 1 TO 3 µm
- GOLD PLATED MIN. 2 µm (ONLY CONTACT AREA)
- SILVER PLATED 3 TO 5 µm (ONLY CONTACT AREA)

Oberflaeche:
- verzinnt 1 bis 3 µm
- vergoldet min. 2 µm (nur Kontaktzone)
- versilbert 3 bis 5 µm (nur Kontaktzone)

3 DOUBLE CRIMPS ARE ONLY POSSIBLE WITH
APPLICATORS AUTHORIZED BY TE (NO HAND TOOL)
SUITABLE TOOLS ON REQUEST
Doppelanschlaege sind nur mit von TE zugelassenen
Anschlagwerkzeugen moeglich (keine Handzangen)
passende Werkzeuge auf Anfrage

(4) GAUGE INSPECTION
Lehrenpruefung

5 DETAILS OF DESIGN ARE LEFT TO MANUFACTURER
Einzelheiten der Ausfuehrung bleiben dem Hersteller ueberlassen

6 ONLY GERMAN LANGUAGE VERSION SHALL BE BINDING
Massgebend ist der deutsche Text

7 PUNCHING OIL RAZIOL CLF 11 SG
Stanzoel:

(8) "Ag+" MARKING ON SILVER PLATED VERSIONS FOR INCREASED LIMIT TEMPERATURE
"Ag+" Markierung auf versilberten Versionen fuer erhoehte Grenztemperatur

(9) 968880 nicht fuer Neuanwendungen, wird ersetzt durch 2141857
(F14) 968882 nicht fuer Neuanwendungen, wird ersetzt durch 2141859
968880 SUPERSEDED BY PN 2141857
968882 SUPERSEDED BY PN 2141859

(10) Unterschiedliche Ausfuehrung und Anzahl der Rillen moeglich
DIFFERENT FORM AND NUMBER OF THE SERRATIONS POSSIBLE

THIS DRAWING IS A CONTROLLED DOCUMENT.

DIMENSIONS: mm

TOLERANCES UNLESS OTHERWISE SPECIFIED: 0 PLC ±; 1 PLC ±0.1; 2 PLC ±0.2; 3 PLC ±0.5; ANGLES ±1°

MATERIAL -
FINISH -

DWN	S. Blidar	22SEP97
CHK	G. Hotea	22SEP97
APVD	J. Woller	22SEP97

TE Connectivity

NAME: PRODUCT GROUP DRAWING FOR Tabellenzeichnung fuer AMP MCP 2.8

PRODUCT SPEC 108-18513
APPLICATION SPEC 114-18148
WEIGHT -

SIZE	CAGE CODE	DRAWING NO	RESTRICTED TO
A1	00779	C-1355036	-

CUSTOMER DRAWING | SCALE 5:1 | SHEET 1 OF 1 | REV J14

4805 (3/13)

X-ON Electronics

Largest Supplier of Electrical and Electronic Components

Click to view similar products for Automotive Connectors ***category:***

Click to view products by TE Connectivity ***manufacturer:***

Other Similar products are found below :

003-018-000 60403001 60993906-B M902-2131 M902-2161 72.330.1035.1 73.353.4028.0 F119300-B F166900 F258300-B F358300-B F407400 F444110 F487000 F509500B-B 827153-1 8N1515-32-24P 9-1326729-8 925474-1 928905-1 964562-4 968782-1 GT17SA-8DS-HU 98891-1012 98947-1016 12004147 12004475-L 12010290 12010309-B 12015454 12020219-B 12020308 12041318-B 12052225-L 12052466 12059125 12064869 12004327-B 12010503-B 12015308 12015384 12015909 1-21030-1 12041254 12041318 12047946-B 12047957 12047957-L 12059473 12066261