© 2020 TE Connectivity. All Rights Reserved.

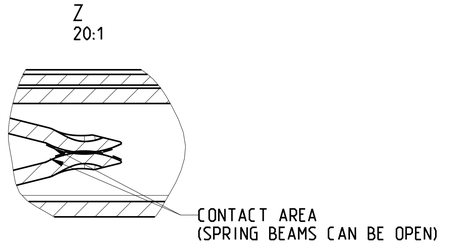

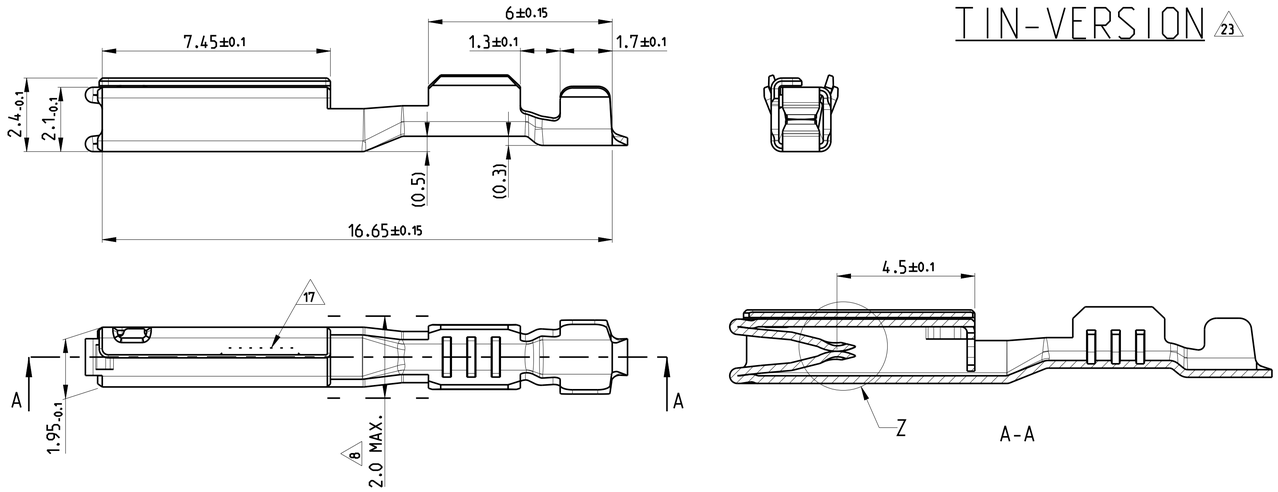

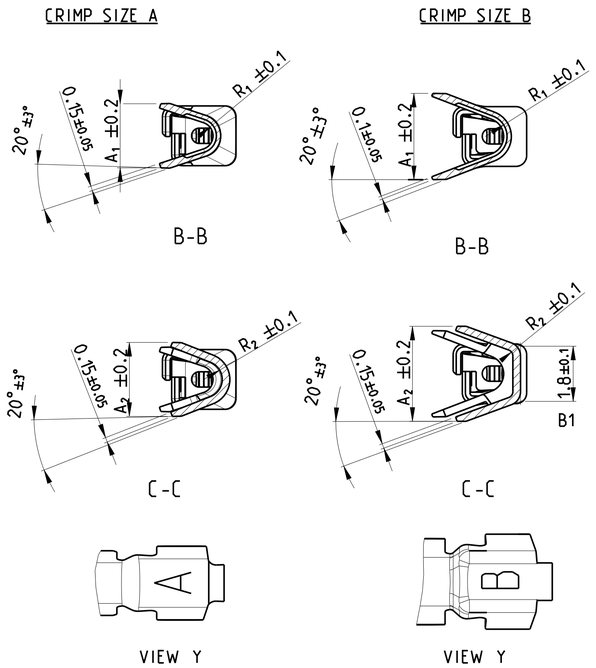

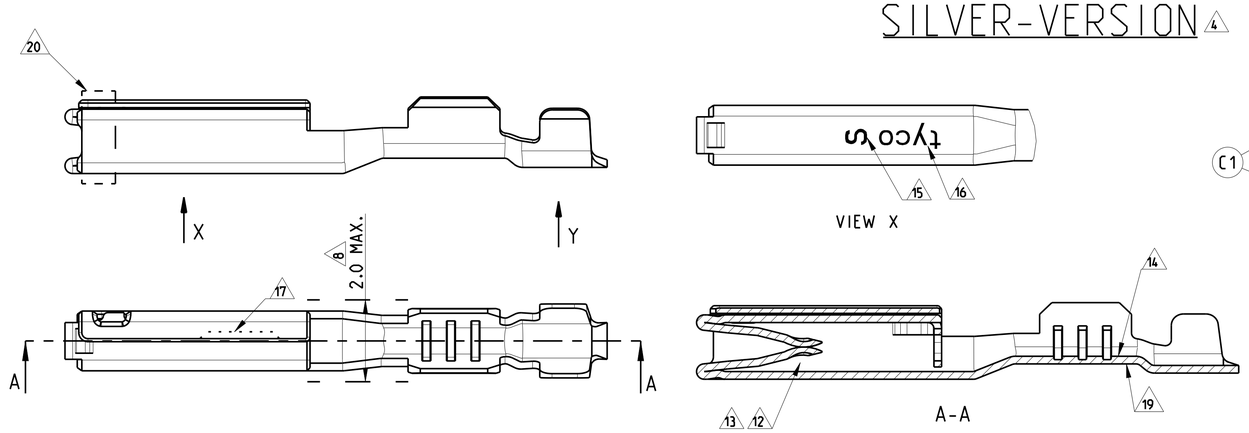

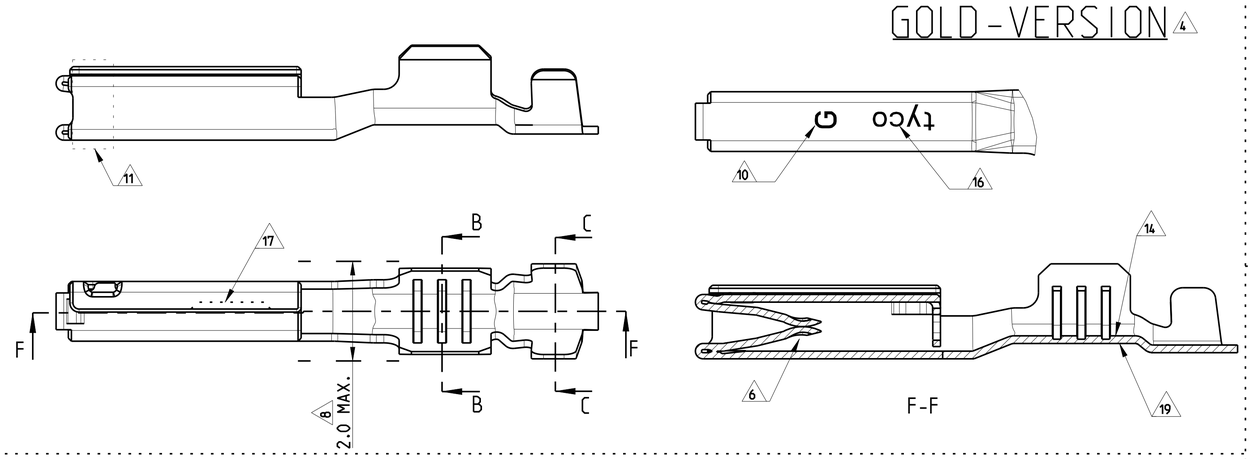

REVISIONS					
P	LTR	DESCRIPTION	DATE	DWN	APVD
	C	SEE ECR-14-012287	01SEP2014	SS	GS
	C1	ECR-15-010934	23JUL2015	SS	GS
	D	REV PER ECO-20-007097	14OCT2020	GTG	WW
	D1	REV PER ECO-21-002916	08MAR2021	RGV	WW

NOTES:

1. MATERIAL: COPPER ALLOY. MATERIAL THICKNESS t=0.25±0.01
2. MUST BE FREE OF CRACKS AND BURRS THAT AFFECT FUCTIONS.
3. WHEN A TIN/GOLD PLATED TERMINAL IS USED ON THE MALE SIDE THEN THE CORRESPONDING PLATING (TIN OR GOLD) MUST BE USED ON THE FEMALE TERMINAL.
4. NICKEL UNDERPLATE 0.1µm MIN. UNLESS OTHERWISE NOTED.
5. 0.2 mm MAX RADIUS PERMISSIBLE ON EDGES AND FILLETS SHOWN AS SHARP FOR STAMPING PARTS.
6. GOLD PLATING 0.76 µm MIN. OVER NICKEL 1.8 µm MIN. (CONTACT AREA ONLY).
7. LUBRICATION: OPTIMOL
8. THE WIDTH OF THE TRANSITION (INDICATED AREA) MAY NOT EXCEED 2.0MM
9. TE CONNECTIVITY-CRIMP SPECIFICATION: 114-13060
10. "G" MARKING TO IDENTIFY Au VERSION
11. GOLD PLATING (>= 0.38 µm AU) FOR GOLD SHORTING BAR APPLICATIONS VALID FOR 1393364-2 AND 1393365-2 ONLY
12. SILVER PLATING 3-5 µm OVER NICKEL 0.5 µm MIN. (CONTACT AREA ONLY)
13. TARNISH FOR SILVER VERSION
14. TIN PLATING 2-4 µm OVER NICKEL (CRIMP AREA ONLY)
15. SILVER MARKING
16. ALTERNATE LOGO "TE" OR "I" IS ALLOWED
17. OPTIONAL NOTCH DESIGN ALLOWED
18. FOR SILVER PLATING: ELECTRICAL PERFORMANCE IS NOT AFFECTED BY GRAY OR BLACK TARNISH ON THE SILVER PLATING SURFACE. ACCEPTABLE SILVER SURFACE CAN INCLUDE GRAY OR BLACK TARNISH.
19. TIN PLATING 0.6 µm MIN. OVER NICKEL (CRIMP AREA ONLY)
20. SILVER PLATING (>=0.5 µm Ag) FOR SILVER SHORTING BAR APPLICATIONS. VALID FOR 1393366-2 AND 1393367-2 ONLY.
21. OEM REQUIRED PART NUMBER FOR TRACEABILITY. THIS PART NUMBER IS SAME AS P/N 0-1393367-2. (C1)
22. OEM REQUIRED PART NUMBER FOR TRACEABILITY. THIS PART NUMBER IS SAME AS P/N 0-1393366-2.
23. PRE-PLATED TIN 2-4 µm ALL OVER.

VIEW SHOWING ACCESS AREA FOR POGO PIN

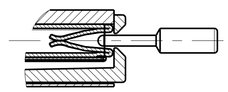

DIMENSIONS OF POGO PIN

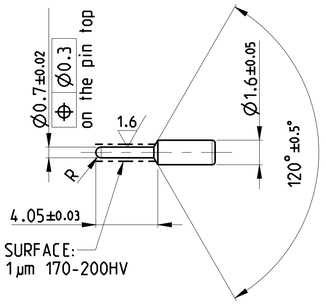

SPRING LOAD IN WORKING POSITION = 1.5N

REELING DIRECTIONS FOR REFERENCE ONLY

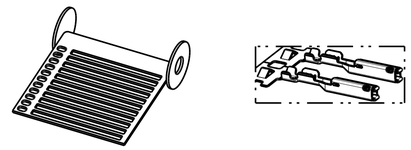

TABLE 1: TERMINAL CRIMP & GRIP REFERENCE TABLE.

PART NO.	PART-REV.	PLATING SPECIFICATION	WEIGHT	CONDUCTOR WIRE SIZE	DIMENSIONS A1	A2	R1	R2	GRIP SIZE	CONDUCTOR CRIMP INFO	INSULATION CRIMP INFO	MATERIAL TYPE
0-1393364-1	B	GOLD PLATING 10	0.22g	0.22	2.11	2.4	0.45	0.6	A	SEE TE Connectivity SPEC 114-13060		CuNi3SiMg DIN 1777
				AWG 22	2.11	2.4	0.45	0.6	A			
0-1393364-2		GOLD PLATING 11		0.35	2.11	2.4	0.45	0.6	A			
0-1393367-2	B	SILVER PLATING 20 12	0.22g	0.22	2.11	2.4	0.45	0.6	A			
2-1393367-2 21				AWG 22	2.11	2.4	0.45	0.6	A			
				0.35	2.11	2.4	0.45	0.6	A			
0-1393367-1	B	TIN PLATING 23	0.22g	0.22	2.11	2.4	0.45	0.6	A			
				AWG 22	2.11	2.4	0.45	0.6	A			
				0.35	2.11	2.4	0.45	0.6	A			
0-1393365-1	B	GOLD PLATING 10	0.22g	AWG 20	2.8	3.1	0.6	0.2	B			
					2.8	3.1	0.6	0.2	B			
				0.50	2.8	3.1	0.6	0.2	B			
0-1393365-2		GOLD PLATING 11		AWG 18	2.8	3.1	0.6	0.2	B			
				0.75	2.8	3.1	0.6	0.2	B			
0-1393366-2	B	SILVER PLATING 20 12	0.22g	AWG 20	2.8	3.1	0.6	0.2	B			
					2.8	3.1	0.6	0.2	B			
2-1393366-2 22				0.50	2.8	3.1	0.6	0.2	B			
				AWG 18	2.8	3.1	0.6	0.2	B			
				0.75	2.8	3.1	0.6	0.2	B			
0-1393366-1	B	TIN PLATING 23	0.22g	AWG 20	2.8	3.1	0.6	0.2	B			
					2.8	3.1	0.6	0.2	B			
				0.50	2.8	3.1	0.6	0.2	B			
				AWG 18	2.8	3.1	0.6	0.2	B			
				0.75	2.8	3.1	0.6	0.2	B			

4805 (3/13)

THIS DRAWING IS A CONTROLLED DOCUMENT.

DIMENSIONS: mm

TOLERANCES UNLESS OTHERWISE SPECIFIED: 0 PLC ±, 1 PLC ±, 2 PLC ±, 3 PLC ±, 4 PLC ±, ANGLES ±

MATERIAL: -

FINISH: -

DWN B. VAN SEBROECK 05FEB01
CHK G. STEINBACH 05FEB01
APVD G. MUMPER 05FEB01

PRODUCT SPEC: -

APPLICATION SPEC: 114-13060

WEIGHT: SEE TABLE

CUSTOMER DRAWING

TE Connectivity

NAME: GET FEMALE TERMINAL
GET BUCHSEN KONTAKT
-

SIZE	CAGE CODE	DRAWING NO	RESTRICTED TO
A1	00779	C-1393364	

SCALE 10:1 | SHEET 1 OF 1 | REV D1

X-ON Electronics

Largest Supplier of Electrical and Electronic Components

Click to view similar products for Automotive Connectors ***category:***

Click to view products by TE Connectivity ***manufacturer:***

Other Similar products are found below :

003-018-000 60403001 60993906-B M902-2131 M902-2161 72.330.1035.1 73.353.4028.0 F119300-B F166900 F258300-B F358300-B F407400 F444110 F487000 F509500B-B 827153-1 8N1515-32-24P 9-1326729-8 925474-1 928905-1 964562-4 968782-1 GT17SA-8DS-HU 98891-1012 98947-1016 12004147 12004475-L 12010290 12010309-B 12015454 12020219-B 12020308 12041318-B 12052225-L 12052466 12059125 12064869 12004327-B 12010503-B 12015308 12015384 12015909 1-21030-1 12041254 12041318 12047946-B 12047957 12047957-L 12059473 12066261