NUMBER 179554

METRIC

三角法(3rd ANGLE PROJECTION)

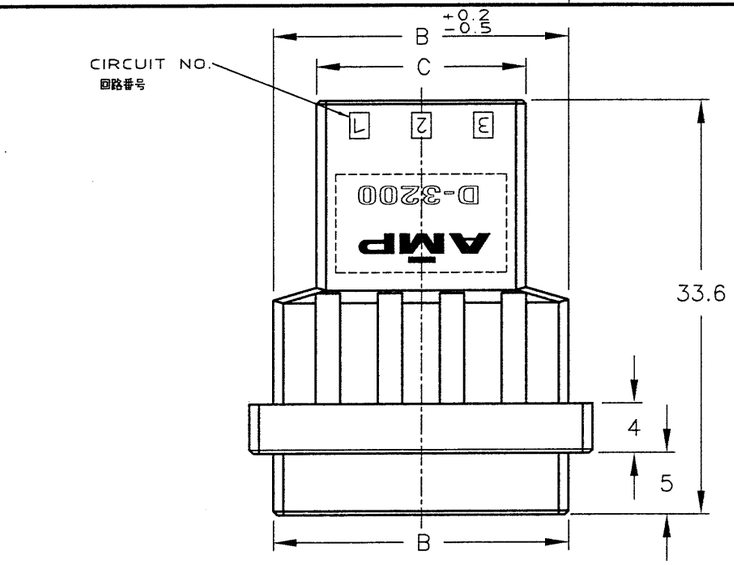

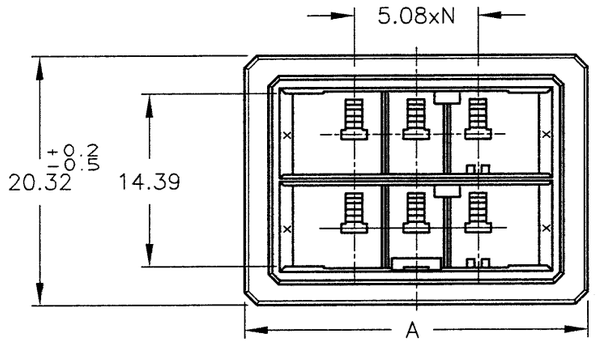

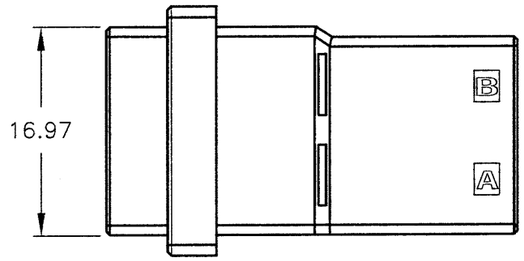

NOTES

1 MATERIAL:GLASS FIELD THERMO PLASTIC,POLYESTER
COLOR;BLACK

~~2 TO COAT ALL SURFACE OF HOUSING WITH TEFLON~~

注記

1 材料：ガラス入り熱可塑性ポリエステル樹脂
色；黒色

~~2 ハウジング全面にテフロン塗装のこと~~

キーイング パターン KEYING PATTERN	キー KEY	PART NUMBER
	XY	3-179554-6
	YY	2-179554-6
	XX	1-179554-6
	XY	3-179554-3
	YY	2-179554-3
	XX	1-179554-3

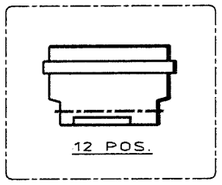

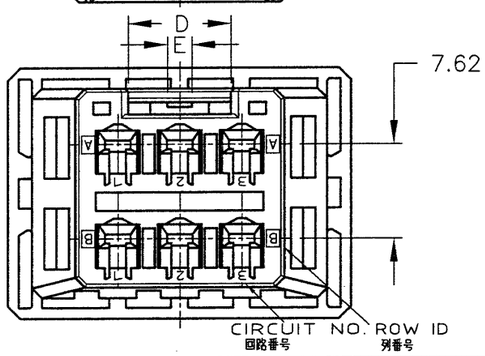

OBSOLETE	2														~~7-179554-6~~
OBSOLETE	2														~~6-179554-6~~
OBSOLETE	2														~~5-179554-6~~
															3-179554-6
															2-179554-6
		12		43.35		39.4		32.4		18.4		4		5	1-179554-6
OBSOLETE	2														~~5-179554-3~~
															3-179554-3
															2-179554-3
		6		28.11		24.16		17.16		8.4		2		2	1-179554-3
	FINISH	POS.極数 / DIMENSION 寸法		A		B		C		D		E		N	型番 PART NUMBER

LTR	変更 (REVISION RECORD)	DR	CHK	DATE
D3	REVISED ECR-08-026918	T.K	S.M	24OCT 2008
D2	OBSOLETE P/N. ECR-08-006764	Y.Y	D.M	14MAR 2008
D1	ADD P/N. (FJ00-1259-00)	D.M	S.M	11OCT '00
D	REVISED (FJ00-2158-95)	K.I	S.M	4/18 '95
C	REVISED (FJ00-0885-94)	K.I	S.M	9/27 '94
B	REVISED (FJ00-0691-94)	NM	S.M	5/31 '94
A	REVISED (FJ00-0454-94)	NM	S.M	4/12 '94
0	RELEASED (FJ00-1095-93)	NM	S.M	2/2 '94

Copyright ©1994 年
タイコ・エレクトロニクス・アンプ株式会社
Copyright ©1994
Tyco Electronics AMP K.K.
ALL RIGHTS RESERVED.

Tyco Electronics Corporation
Kawasaki, Japan

絶縁電線断面積(WIRE RANGE)	被覆外径(INSULATION DIA.)
– mm² (AWG –)	– mmφ
材料(MATERIAL) 注記参照 SEE NOTES	仕上(FINISH)
DR. 31 JAN 94 N.Matsubara	DE. 31 JAN 94 N.Matsubara
CHK. 2 FEB 94 S.MANABE	APP. 2 FEB 94 S.MANABE

名称(NAME) フリーハンギングタイプタブハウジング ダイナミック D3200D シリーズ用
WIRE TO WIRE TAB HSG FOR DYNAMIC D-3200D FREE HANGING TYPE

一般公差 (GENERAL TOLERANCE)
10以下 : ±0.2
10を超え 30以下 : ±0.25
30を超え100以下 : ±0.3
角度 : ±3°

SIZE	LOC	番号(No.)
A3	J	179554

尺度(SCALE)	REV.	SHEET
2/1	D3	1 OF 1

単位: 粍 DIMENSIONS IN MM. DO NOT SCALE PRINT

PRINT DIST

AMP-J
REV.10/'83

(CUSTOMER DRAWING) 顧客用図面

X-ON Electronics

Largest Supplier of Electrical and Electronic Components

Click to view similar products for Headers & Wire Housings ***category:***

Click to view products by TE Connectivity ***manufacturer:***

Other Similar products are found below :

892-18-020-10-001101 58102-G61-06LF 582553-1 0009485154 009176003701906 0050291907 LY20-4P-DT1-P1E-BR 02.125.8002.8 609-3404 61062-3 61082-181009 622-3653LF 63453-116 636-1030 636-1427 636-3427 636-4007 641938-9 641991-4 644827-2 65817-010LF 65817-015LF 65863-015LF 66207-023LF 67095-007LF 67601157 68645-018 68648-049 70.362.1628.0 70-4210 70-4226B 70-4853B 707-5020 707-5028 71.350.2428.0 71918-208LF 71961-016LF 733-134 733-162 754199-000 760-3052 787-8014-00 79531-3000 FCN-360C032-B FCN-367T-T012/H FCN-723D010/2 80.063.4001.1 800-90-001-10-001000 800-90-010-10-002000 801-43-002-10-013000