SCALA NON IMPEGNATIVA (DO NOT SCALE)
DIMENSIONI IN (DIMENSIONS IN) mm

METRIC

PROIEZIONE EUROPEA (EUROPEAN PROJECTION)

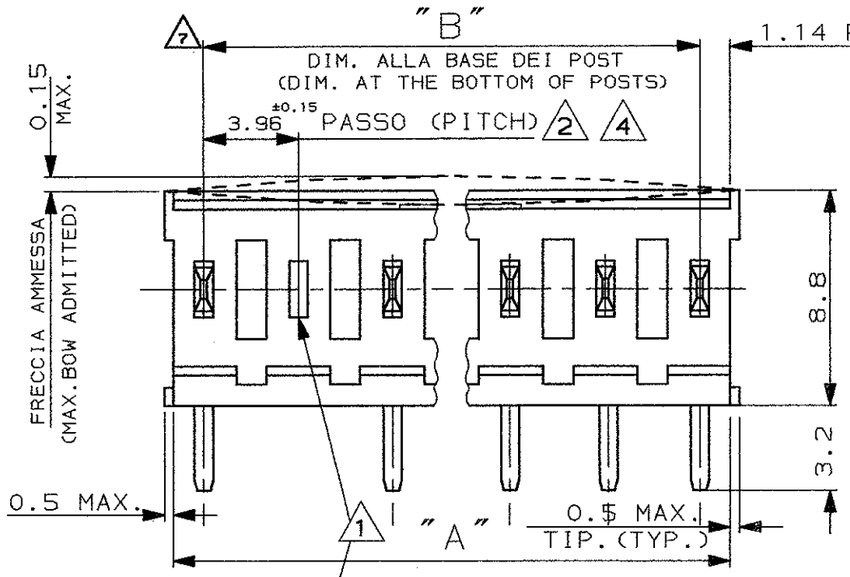

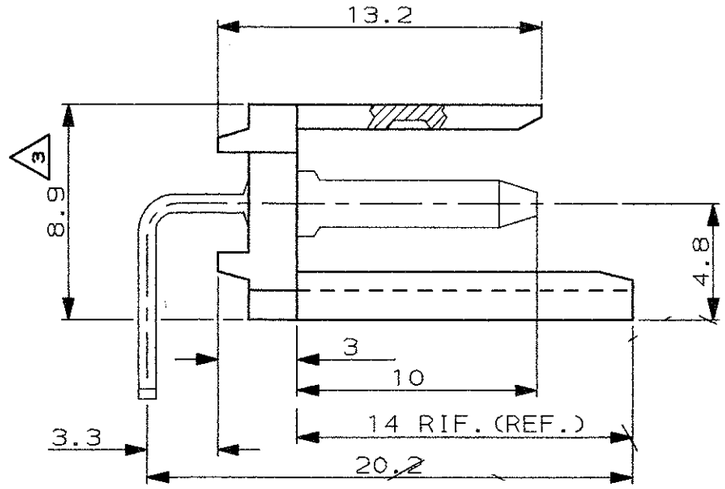

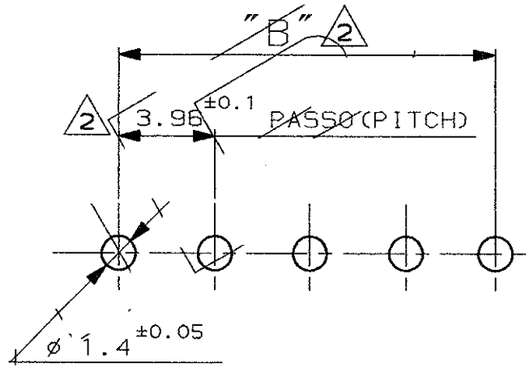

DIMA DI FORATURA SU C.S.
(RECOMMANDED P.C.B. HOLE PATTERN)

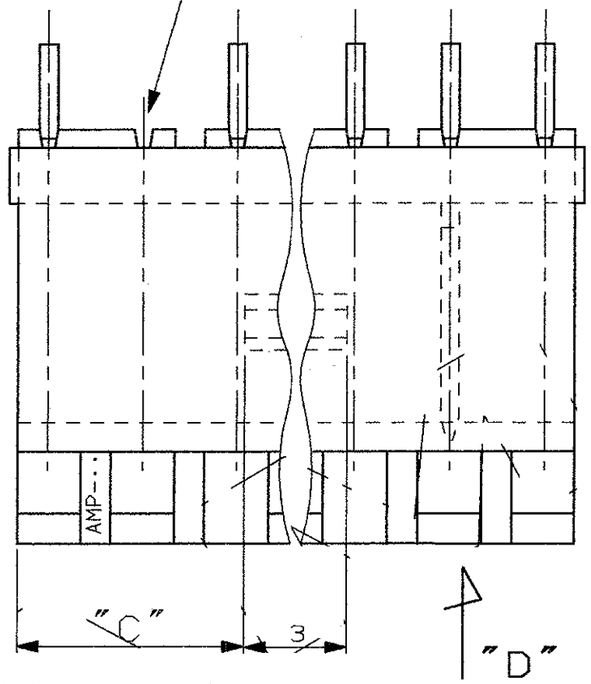

N° POS.	POS. MANCANTI RIF. A DET. UNLOADED POS. REF. TO DETAIL	DIM. "A"	DIM. "B"	DIM. "C"	P.N. STAGNATO (TIN PLTD. VERSION)	DORATO 0.37µmm AREA CONTATTO STAGNATO NELLA ZONA A SALDARE 0.37µmm GOLD PLTD ON CONTACT AREA TIN PLTD ON SOLDER TAIL	DORATO 0.76µmm AREA CONTATTO STAGNATO NELLA ZONA A SALDARE 0.76µmm GOLD PLTD ON CONTACT AREA TIN PLTD ON SOLDER TAIL	DORATO 1.27µmm AREA CONTATTO STAGNATO NELLA ZONA A SALDARE 1.27µmm GOLD PLTD ON CONTACT AREA TIN PLTD ON SOLDER TAIL
12	–	45.9	43.59	21.4	280620-1	280620-2	~~280620-4~~	~~280620-3~~
10	–	37.9	35.66	17.5	280619-1	~~280619-2~~ (10)	~~280619-4~~	~~280619-3~~ (9)
8	–	30.0	27.74	13.5	280618-1	280618-2	~~280618-4~~	~~280618-3~~ (9)
6	DET. "W"	22.1	15.85	9.5	(9) ~~282468-1~~	–	–	–
6	–	22.1	19.81	9.5	280617-1	280617-2	~~280617-4~~	~~280617-3~~ (9)
4	–	14.2	11.89	5.6	280616-1	280616-2	~~280616-4~~	~~280616-3~~ (8)
2	–	6.2	3.96	1.6	280615-1	280615-2	280615-4	~~280615-3~~ (8)

(5) (6) (6)

CONTATTI: (CONTACTS) BRONZO PER VERSIONE STAGNATA (PH BRONZE FOR TIN PLTD. VERSION ONLY) OTTONE PER LA VERSIONE DORATA (BRASS FOR GOLD PLTD VERSION.)

BLOCCHETTO: (HOUSING) POLICARBONATO CARICATO VETRO COLORE VERDE POLYCARBONATE GLAS FIBER FILLED COLOUR GREEN

MATERIALE (MATERIAL)

DET. VIEWS FROM "D"

DET. "W"

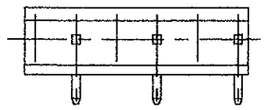

(1) EVENTUALE POSIZIONE DEI CONTATTI MANCANTI, VEDERE DETTAGLI (POSITIONS OF UNLOADED CONTACTS , SEE DETAILS)

(2) TOLLERANZA NON CUMULATIVA (NOT CUMULATIVE TOLERANCE)

(3) ALLA BASE (AT BASE)

(4) DIMENSIONE MISURATA ALLA BASE DEI POSTS (POSTS BASE DIMENSION)

(5) **NOT IN PRODUCTION**

(6) **P/N OBSOLETO** (OSOLETE P/N)

(7) PER VERSIONI CARICATE PARZIALMENTE LA DIMENSIONE "B" E' MISURATA TRA IL PRIMO E L'ULTIMO CONTATTO DISPONIBILE (FOR PARTIALLY LOADED VERSION , DIM"B" IS MEASURED BETWEEN FIRST AND LAST AVAILABLE CONTACT)

(8) **SUPERSEDED**

280615-3	SUPERSEDED BY 280615-2
280616-3	SUPERSEDED BY 280616-2

(9) **OBSOLETE PARTS: OBSOLETE CIS STREAMLINING PER D.RENAUD/D.SINISI**

(10) **OBSOLETE**

REV. (REV. LTR.)	REVISIONI (REVISION RECORD)	DIS. (DR)	DATA (DATE)
S2	ECR-10-022530	KK	28MAY11
S1	REVISED PER ECO-09-021826	KK	JAN10
S	OBSOLETED P/N's ET00-0244-97	F.B.	20NOV 97
R	OBSOLETED P/N's: 280615-3 AND 280616-3 (ET00-478-96)	C.P.	14 Nov '96
P	REV. PER EC ET00-0030 -94	C.C.	15 FEB. 94
N	P.N. 282468-1 WAS IA92-51085	C.C	10-92
M	ADDED IA92-51085 CANCELLED 15 POS. PROPOSAL REDRAWN	C.C.	3-92
L	ADDED 0.76µGOLD VERSION	A.B.	6-85
J	ADDED P.C.B. LAYOUT	Z.R.	1-83
H	ADDED FINISH NOTE	A.B.	10-82
E	ADDED DASH 3	R.G.	9-78

CUSTOMER DRAWING FOR REFERENCE ONLY

DISEGNO PER CLIENTE SOLO PER RIFERIMENTO

THIS DRAWING IS UNPUBLISHED | RELEASE FOR PUBLICATION 19

© COPYRIGHT 19 BY TE INCORPORATED, HARRISBURG, PA. ALL INTERNATIONAL RIGHT RESERVED. TE PRODUCTS MAY BE COVERED BY U.S. AND FOREIGN PATENT AND/OR PATENT PENDING

TOLLERANZE: SE NON DIVERSAMENTE SPECIFICATO (TOLERANCES: UNLESS OTHERWISE SPECIFIED) ± 0.4

ANGOLI (ANGLES) ± 2°

DIAM. ISOLANTE (INS. DIA. RANGE) –

RANGO FILO (WIRE RANGE) –

SCALA (SCALE) –

TE Connectivity

DIS. (DR.) 27-09-1991 C. CORDOLA

FIRT ISSUE BY R. VOLPATO DATED 6-3-1974

APP. (APP.) –

DESCRIZIONE (DESCRIPTION) AMP-MODU MOD. I RIGHT ANGLE POST SUPPORT ASS'Y

LOC.	SIZE	NUMERO (DWG NO)	REV.	FOGLIO (SHEET)
I	A3	C-280615	S2	1 DI (OF) 1

DISTRIBUZIONE (PRINT DIST.)

X-ON Electronics

Largest Supplier of Electrical and Electronic Components

Click to view similar products for Headers & Wire Housings ***category:***

Click to view products by TE Connectivity ***manufacturer:***

Other Similar products are found below :

892-18-020-10-001101 58102-G61-06LF 582553-1 0009485154 009176003701906 0050291907 LY20-4P-DT1-P1E-BR 02.125.8002.8 609-3404 61062-3 61082-181009 622-3653LF 63453-116 636-1030 636-1427 636-3427 636-4007 641938-9 641991-4 644827-2 65817-010LF 65817-015LF 65863-015LF 66207-023LF 67095-007LF 67601157 68645-018 68648-049 70.362.1628.0 70-4210 70-4226B 70-4853B 707-5020 707-5028 71.350.2428.0 71918-208LF 71961-016LF 733-134 733-162 754199-000 760-3052 787-8014-00 79531-3000 FCN-360C032-B FCN-367T-T012/H FCN-723D010/2 80.063.4001.1 800-90-001-10-001000 800-90-010-10-002000 801-43-002-10-013000