DRAWING MADE IN THIRD ANGLE PROJECTION

© COPYRIGHT 1975-83 BY AMP INCORPORATED, HARRISBURG, PA. ALL INTERNATIONAL RIGHTS RESERVED. AMP INCORPORATED PRODUCTS COVERED BY U. S. AND FOREIGN PATENTS AND/OR PATENTS PENDING.

LOC AD | DIE 39

REVISIONS

P	F	ZONE	LTR	DESCRIPTION	DATE	APPROVED
✓			E	REV. PER AD-5084	2-1-91	RF
✓			F	REV PER 0010-0981-93	9-93	RAC/JM
✓			G	REV PER 0010-0875-94 JK	3-10-94	
✓			H	REV PER 0310-0146-96 EB	2-27-97	BAS
			H1	REVISED PER ECO-09-026346	NOV09	AEG

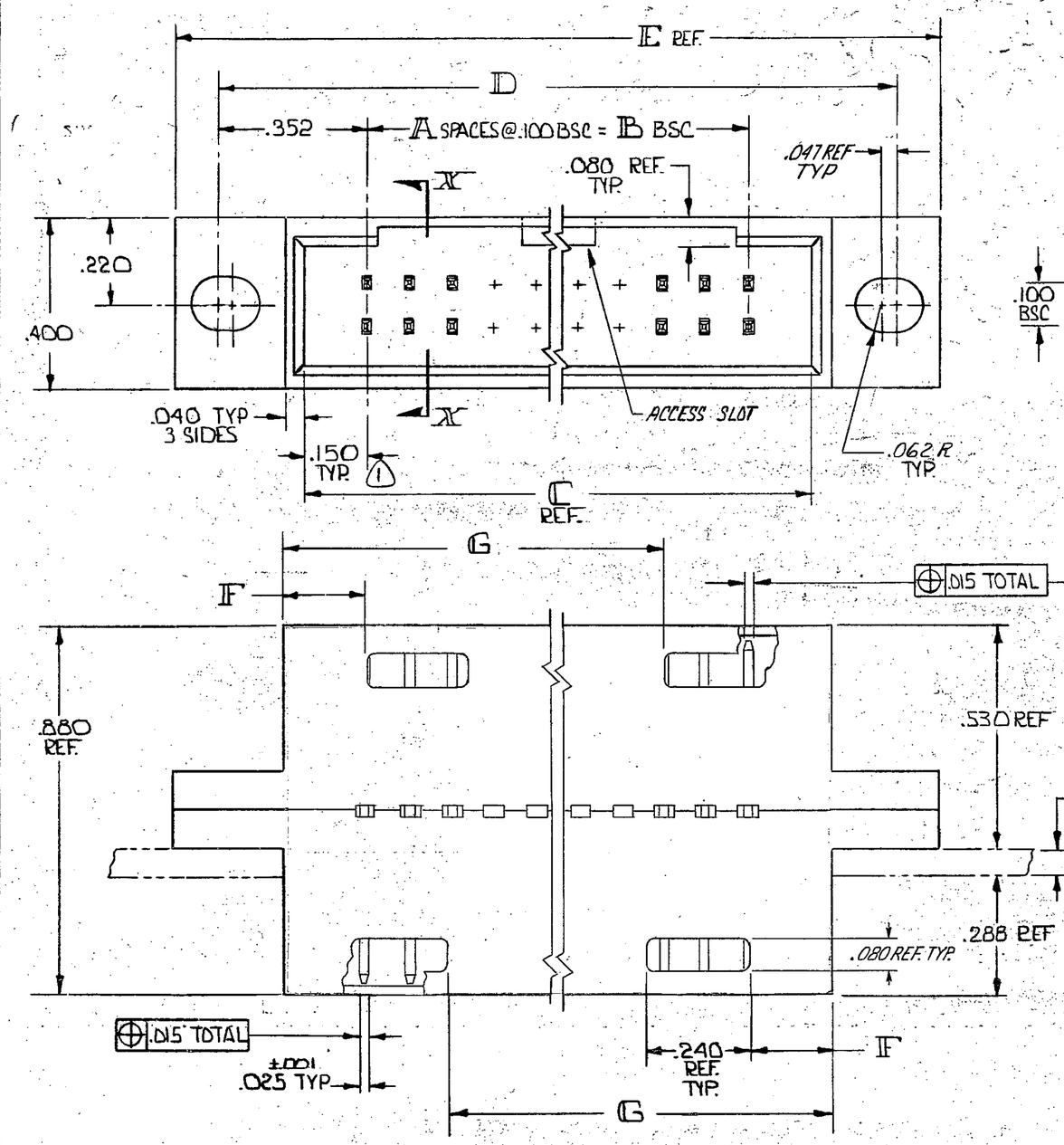

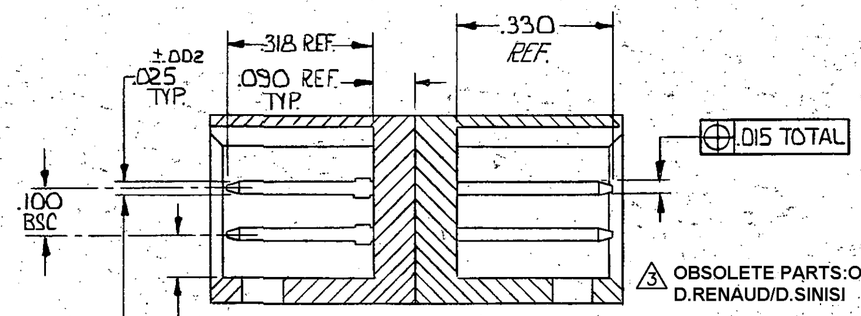

SECTION X-X

3 OBSOLETE PARTS: OBSOLETE CIS STREAMLINING PER D.RENAUD/D.SINISI

1 WILL ALSO MATE W/OTHER CONNECTORS WHICH ARE COMPATIBLE WITH THE .150 END DIM.
WILL MATE W/MOD IV HAVING FOUR EXTRA EMPTY CIRCUITS (TWO EACH END -- EX: 20 POS. POST HDR. WILL MATE W/24 POS. MOD IV HSG.)

2 OBSOLETE PART NUMBER

	H	G	F	E	D	C	B	A	NO. OF POS.	PART NO
	.700	—	.190	1.204	1.004	.600	.300	3	8	2-2
3 OBSOLETE	3.300	2.890	.190	3.804	3.604	3.200	2.900	29	60	~~2-87605-6~~
	3.200	2.790		3.704	3.504	3.100	2.800	28	58	2-2 -5
	3.100	2.690		3.604	3.404	3.000	2.700	27	56	2-2 -4
	3.000	2.590		3.504	3.304	2.900	2.600	26	54	2-2 -3
	2.900	2.490		3.404	3.204	2.800	2.500	25	52	2-2 -2
	2.800	2.390		3.304	3.104	2.700	2.400	24	50	2- -1
	2.700	2.290		3.204	3.004	2.600	2.300	23	48	2-2 -0
	2.600	2.190		3.104	2.904	2.500	2.200	22	46	1-2 -9
	2.500	2.090		3.004	2.804	2.400	2.100	21	44	1-2 -8
	2.400	1.990		2.904	2.704	2.300	2.000	20	42	1-2 -7
	2.300	1.890		2.804	2.604	2.200	1.900	19	40	1- -6
	2.200	1.790		2.704	2.504	2.100	1.800	18	38	1-2 -5
	2.100	1.690		2.604	2.404	2.000	1.700	17	36	1-2 -4
	2.000	1.590		2.504	2.304	1.900	1.600	16	34	1- -3
OBSOLETE 3	1.900	1.490		2.404	2.204	1.800	1.500	15	32	~~1-2~~
	1.800	1.390		2.304	2.104	1.700	1.400	14	30	~~1-1~~
	1.700	1.290		2.204	2.004	1.600	1.300	13	28	1-2 -0
	1.600	1.190		2.104	1.904	1.500	1.200	12	26	-9
	1.500	1.090		2.004	1.804	1.400	1.100	11	24	-8
	1.400	.990		1.904	1.704	1.300	1.000	10	22	2 -7
	1.300	.890	.190	1.804	1.604	1.200	.900	9	20	-6
	1.200	—	.490	1.704	1.504	1.100	.800	8	18	2 -5
	1.100	—	.390	1.604	1.404	1.000	.700	7	16	2 -4
	1.000	—	.390	1.504	1.304	.900	.600	6	14	2 -3
	.900	—	.290	1.404	1.204	.800	.500	5	12	2 -2
	.800	—	.290	1.304	1.104	.700	.400	4	10	87605 -1

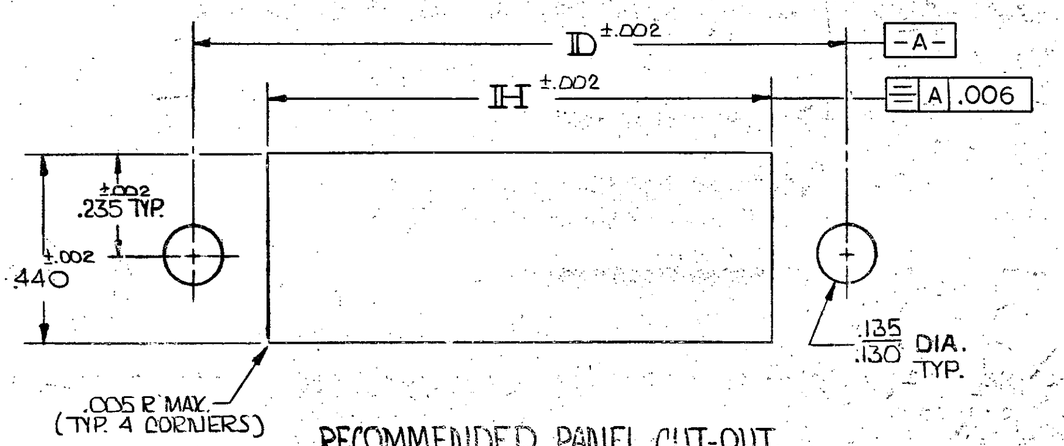

RECOMMENDED PANEL CUT-OUT

UNLESS OTHERWISE SPECIFIED DIMENSIONS ARE IN INCHES.
TOLERANCES ON:
DECIMALS ±.005
ANGLES ±

MATERIAL
HSG'S. - GLASS FILLED NYLON COLOR: BLACK
CONTACT - PHOS BRONZE

FINISH
CONTACT - .000030 GOLD OVER .000050 NICKEL

CONTRACT NO
DR 9/18/75
CHK 9-18-75
APPD 9-22-75
APPD R. Clark 9-22-75
DSGN APPD
OTHER APPD

AMP INCORPORATED Harrisburg, Pa.

NAME
HEADER ASS'Y. MOD II
.100 x .100 CENTERS MTG. EARS
W/PIN PROTECTORS BOTH SIDES
(MATES W/ AMP LATCH AND/OR FFC) 1
BOTH SIDES

SIZE C | CODE IDENT NO | DRAWING NO 87605

SCALE | SHEET 1 of 1

CUSTOMER DRAWING

X-ON Electronics

Largest Supplier of Electrical and Electronic Components

Click to view similar products for Headers & Wire Housings ***category:***

Click to view products by TE Connectivity ***manufacturer:***

Other Similar products are found below :

892-18-020-10-001101 58102-G61-06LF 582553-1 0009485154 009176003701906 0050291907 LY20-4P-DT1-P1E-BR 02.125.8002.8 609-3404 61062-3 61082-181009 622-3653LF 63453-116 636-1030 636-1427 636-3427 636-4007 641938-9 641991-4 644827-2 65817-010LF 65817-015LF 65863-015LF 66207-023LF 67095-007LF 67601157 68645-018 68648-049 70.362.1628.0 70-4210 70-4226B 70-4853B 707-5020 707-5028 71.350.2428.0 71918-208LF 71961-016LF 733-134 733-162 754199-000 760-3052 787-8014-00 79531-3000 FCN-360C032-B FCN-367T-T012/H FCN-723D010/2 80.063.4001.1 800-90-001-10-001000 800-90-010-10-002000 801-43-002-10-013000