THIS DRAWING IS UNPUBLISHED. RELEASED FOR PUBLICATION ,19 .
© COPYRIGHT 19 ALL RIGHTS RESERVED.

LOC	DIST
J	

REVISIONS
変更

P	LTR	DESCRIPTION	DATE	DWN	APVD
	A3	REVISED PER ECO-11-005030	11MAR11	RK	HMR

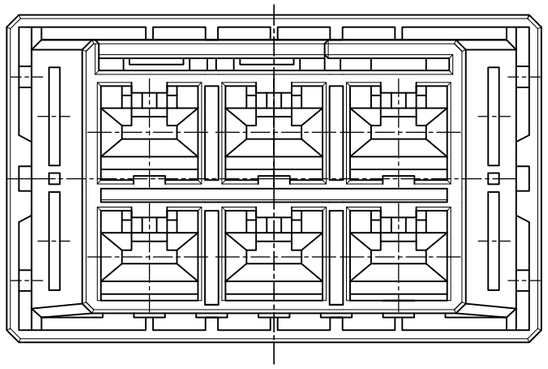

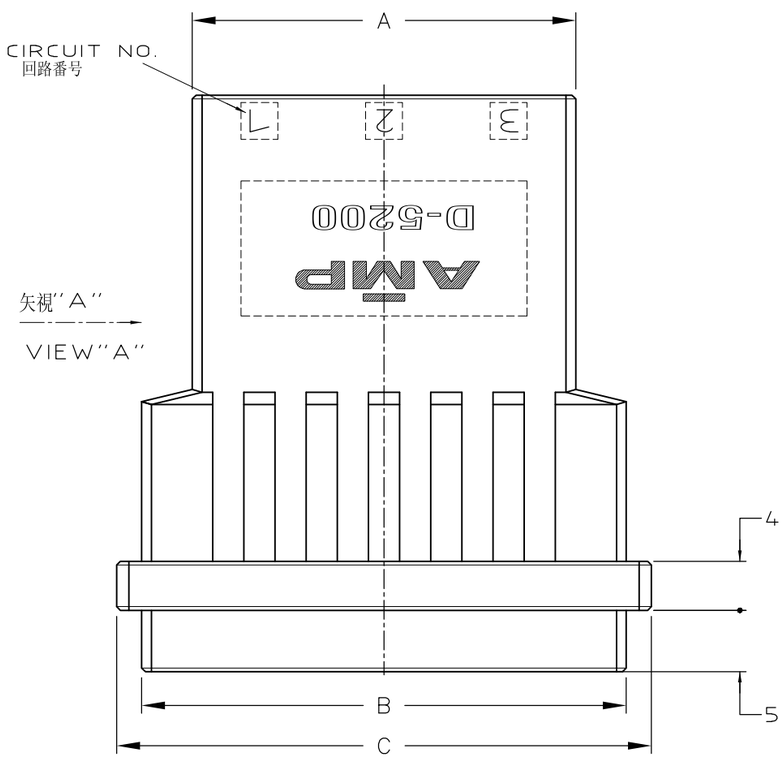

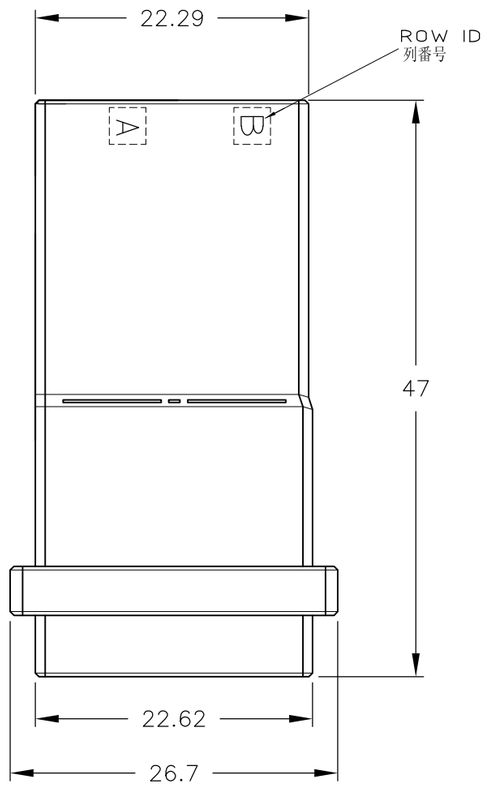

注 記

1. 材料 ハウジング ガラス入り熱可塑性 ポリエステル樹脂(94V-0),色 黒
2. ~~ハウジング全面にテフロン塗装の~~こと

NOTES

1. MATERIAL:HOUSING:GLASS FILED THERMO PLASTIC ,POLYESTER(94V-0),COLOR:BLACK
2. ~~TO COAT ALL SURFACE OF HOUSING WITH TEFLON~~

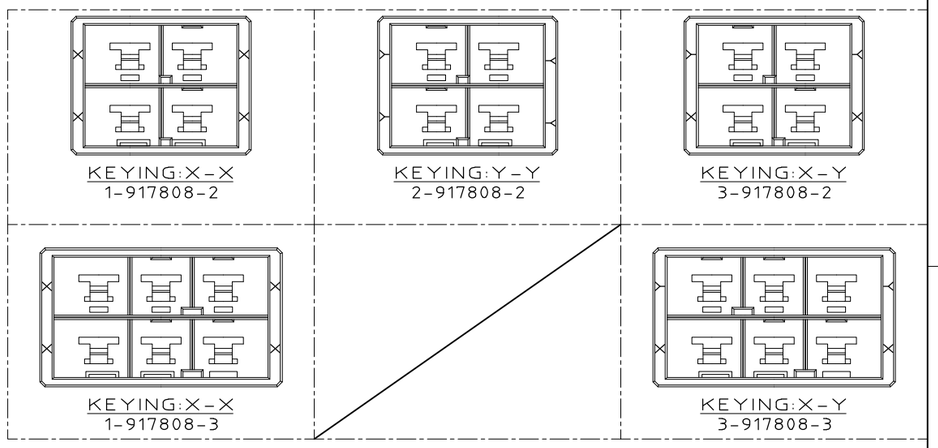

								3-917808-3
								2-917808-3
		31.27	39.52	43.6	20.32	2	6	1-917808-3
OBSOLETE	2							~~6-917808-2~~
OBSOLETE	2							~~5-917808-2~~
								3-917808-2
								2-917808-2
		21.11	29.36	33.44	10.16	1	4	1-917808-2
	FINISH	A	B	C	D	N	POS	P/N

WIRE RANGE 抱合電線断面積 | INSULATION DIA 被覆外径

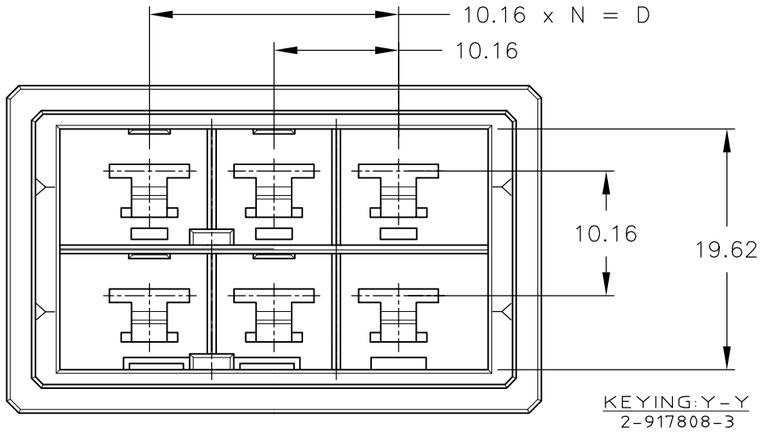

KEYING:Y-Y
2-917808-3

DIMENSIONS: 単位 耗 mm

TOLERANCES UNLESS OTHERWISE SPECIFIED:
一般公差
10 : ±0.2
30 >10 : ±0.25
100 >30 : ±0.3
ANGLE : ±0.3°

MATERIAL 材料: 1

FINISH 仕上

DWN K.IKEDA 31/OCT/'95
CHK Y.ISHIKAWA 31/OCT/'95
APVD S.MANABE 1/NOV/'95
PRODUCT SPEC 製品規格 108-5453
APPLICATION SPEC 取付適用規格 114-5206
WEIGHT T1

TE Connectivity

NAME 名称: 2列 タブ ハウジング フリーハンギング タイプ
DOUBLE ROW TAB HSG (FREE HANGING) <DYNAMIC D-5200 M>

SIZE A3 | CAGE CODE 00779 | DRAWING NO 番号 917808

CUSTOMER DRAWING | SCALE 尺度 2-1 | SHEET 1 OF 1 | REV A3

顧客用図面

X-ON Electronics

Largest Supplier of Electrical and Electronic Components

Click to view similar products for Headers & Wire Housings ***category:***

Click to view products by TE Connectivity ***manufacturer:***

Other Similar products are found below :

892-18-020-10-001101 58102-G61-06LF 582553-1 0009485154 009176003701906 0050291907 LY20-4P-DT1-P1E-BR 02.125.8002.8 609-3404 61062-3 61082-181009 622-3653LF 63453-116 636-1030 636-1427 636-3427 636-4007 641938-9 641991-4 644827-2 65817-010LF 65817-015LF 65863-015LF 66207-023LF 67095-007LF 67601157 68645-018 68648-049 70.362.1628.0 70-4210 70-4226B 70-4853B 707-5020 707-5028 71.350.2428.0 71918-208LF 71961-016LF 733-134 733-162 754199-000 760-3052 787-8014-00 79531-3000 FCN-360C032-B FCN-367T-T012/H FCN-723D010/2 80.063.4001.1 800-90-001-10-001000 800-90-010-10-002000 801-43-002-10-013000