THIS DRAWING IS UNPUBLISHED. RELEASED FOR PUBLICATION -,- .
© COPYRIGHT - By - ALL RIGHTS RESERVED.

LOC	DIST
ES	00

REVISIONS

P	LTR	DESCRIPTION	DATE	DWN	APVD
	C2	ECR-21-101067	09APR2021	T.Q	N.S

(AS SHOWN : -6)

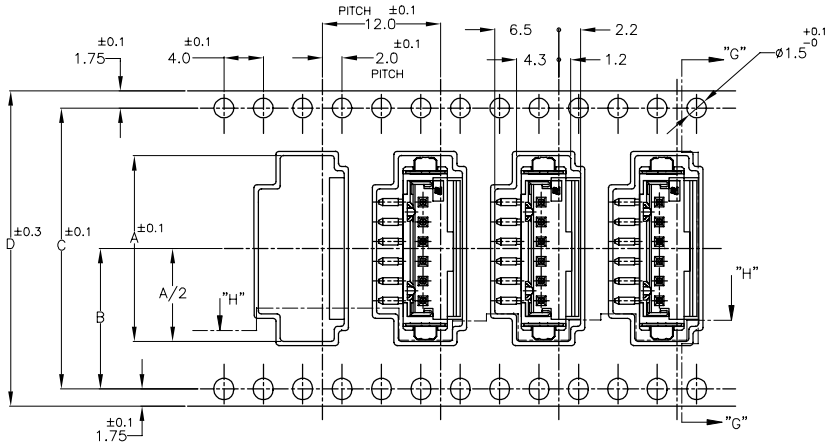

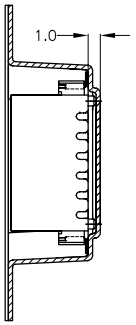

SECT "G"-"G"

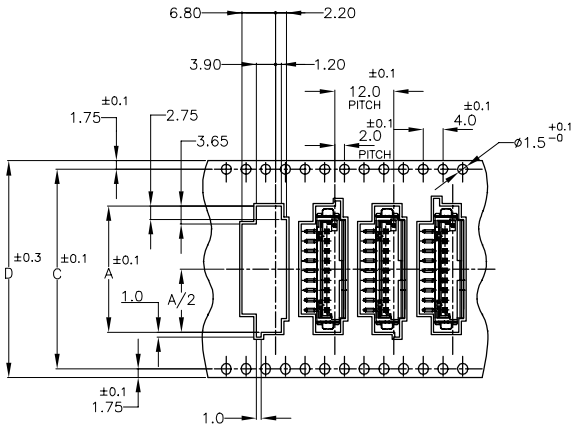

9P ONLY

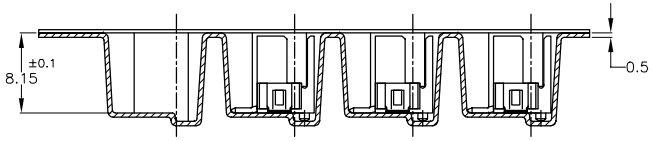

SECT "H"-"H"

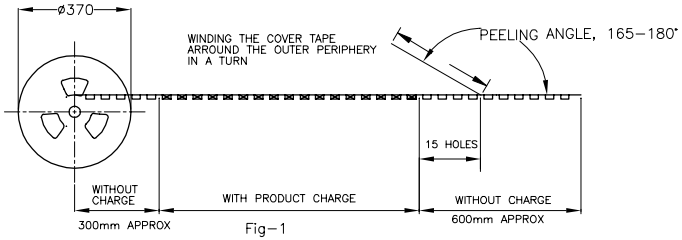

Fig-1

BLACK		44.0	40.5	20.25	25.6		9	2-292174-9	
		44.0	40.4	20.2	22.9		8	2-	-8
		32.0	28.4	14.2	20.9		7	2-	-7
		32.0	28.4	14.2	18.9		6	2-	-6
		32.0	28.4	14.2	16.9		5	2-	-5
		32.0	28.4	14.2	14.9		4	2-	-4
		32.0	28.4	14.2	12.9		3	2-	-3
	WITH	32.0	28.4	14.2	10.9	700	2	2-292174-2	
NATURAL		44.0	40.5	20.25	25.6		9	292174-9	
		44.0	40.4	20.2	22.9		8		-8
		32.0	28.4	14.2	20.9		7		-7
		32.0	28.4	14.2	18.9		6		-6
		32.0	28.4	14.2	16.9		5		-5
		32.0	28.4	14.2	14.9		4		-4
		32.0	28.4	14.2	12.9		3		-3
	WITH	32.0	28.4	14.2	10.9	700	2	292174-2	
COLOR	PLATE	D	C	B	A	QTY/REEL	POS	TAPING P/N	

NOTES:

1. PEELING RESISTANCE: 0.196N(20gf)-0.686N(70gf)
   PEELING SPEED: 300mm/min

TOLERANCE UNLESS OTHERWISE SPECIFIED

10>*	:±0.2
30>*>10	:±0.25
100>*>30	:±0.3
ANGLE	:±3°

THIS DRAWING IS A CONTROLLED DOCUMENT.

DIMENSIONS: MM

TOLERANCES UNLESS OTHERWISE SPECIFIED:

0 PLC	±
1 PLC	±
2 PLC	±
3 PLC	±
4 PLC	±
ANGLES	±

MATERIAL

FINISH

DWN	JACK HOU	17SEP10
CHK	MARTIN LI	17SEP10
APVD	STEVEN YAO	17SEP10
PRODUCT SPEC		
APPLICATION SPEC		
WEIGHT		

TE Connectivity

NAME

ON TAPING (EMBOSS)
TE CT CONNECTOR POST HEADER ASS'Y
(BOX-V SMT W/BOSS & TAIL)

SIZE	CAGE CODE	DRAWING NO	RESTRICTED TO
A3	00779	C-292174	—

CUSTOMER DRAWING

SCALE	SHEET	REV
-/-	1 OF 3	C2

1470-19 (3/11)

THIS DRAWING IS UNPUBLISHED. RELEASED FOR PUBLICATION -,- .
© COPYRIGHT - By - ALL RIGHTS RESERVED.

LOC	DIST
ES	00

REVISIONS

P	LTR	DESCRIPTION	DATE	DWN	APVD
	-	SEE SHEET 1	-	-	-

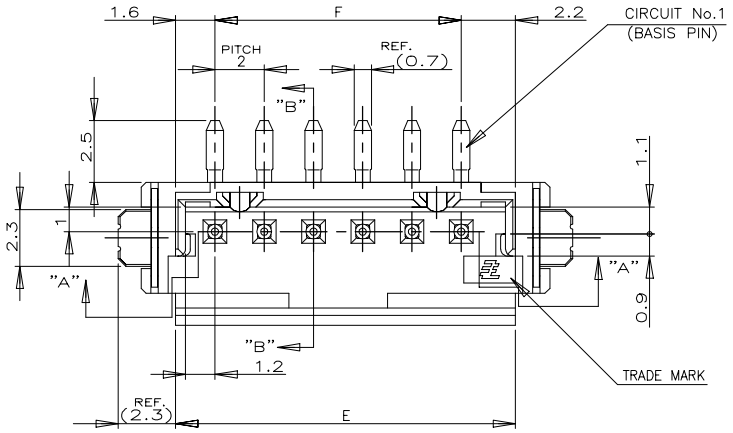

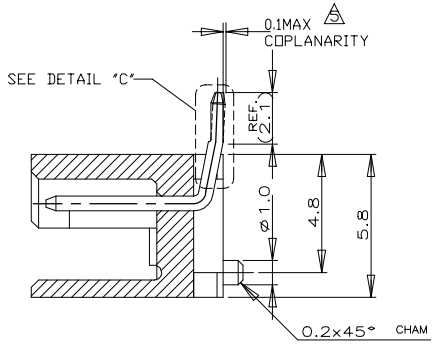

SECT "B"-"B"

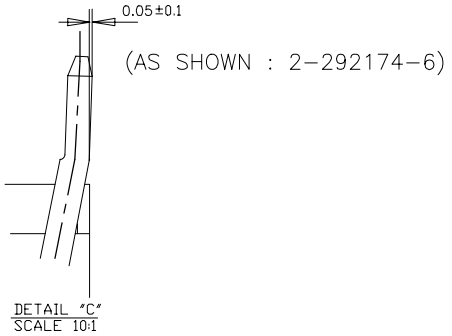

NOTES;

2. MATERIAL:HSG: NYLON (UL94V-0)
   COLOR:BLACK OR NATURAL
   POST:TIN BRASS
   TAIL:TIN BRASS
3. OCCUPANT AREA ON PC BOARD
4. PRODUCT SPEC :108-60016
5. TO BE MEASURED WITH CONNECTOR PLACED ON HORIZONTAL DATUM SURFACE,FLOAT OF SOLDER TINE AND TAIL FROM DATUM SURFACE IS 0.1mm MAX
6. 292174-6 SHOWED ON SHEET 3/3.

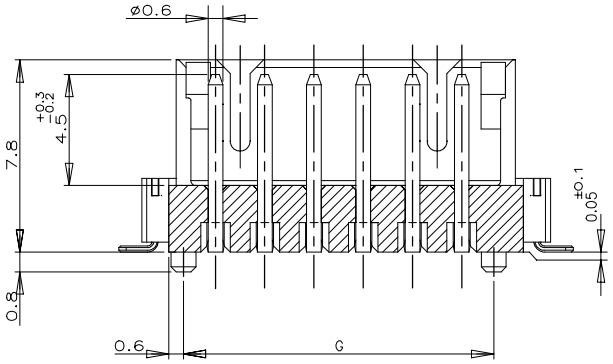

SECT "A"-"A"

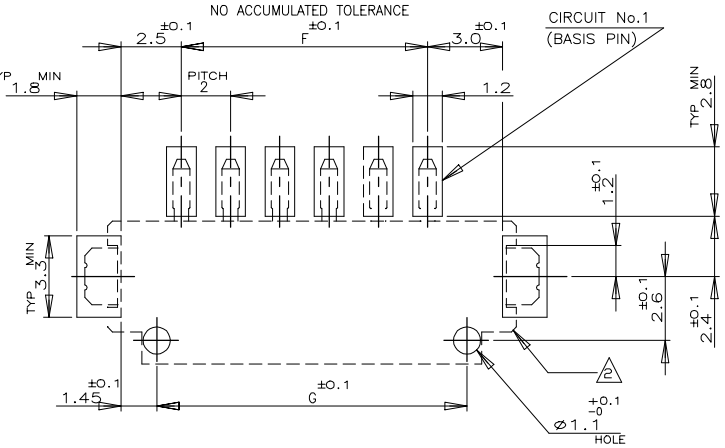

RECOMENOED P.C.BOARD LAYOUT
(P.C.B THK:0.8mm MIN)

G	F	E	Pos.	BLACK	NATURAL
18.6	16.0	19.8	9	2-292174-9	2921749
16.6	14.0	17.8	8	2- -8	-8
14.6	12.0	15.8	7	2- -7	-7
12.6	10.0	13.8	6	2- -6	6 -6
10.6	8.0	11.8	5	2- -5	-5
8.6	6.0	9.8	4	2- -4	-4
6.6	4.0	7.8	3	2- -3	-3
4.6	2.0	5.8	2	2-292174-2	292174-2
				P/N	

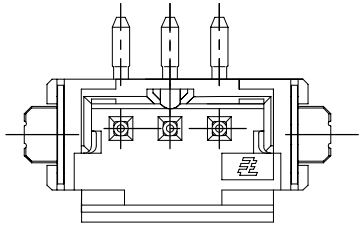

3 P

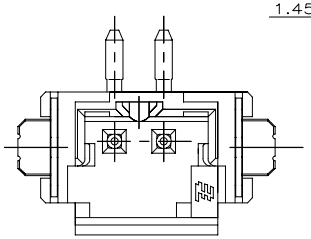

2 P

TOLERANCES UNLESS OTHERWISE SPECIFIED:
10≥* : ±0.2
30≥*>10 : ±0.25
100≥*>30 : ±0.3
ANGEL : ±3°

THIS DRAWING IS A CONTROLLED DOCUMENT.

DIMENSIONS: MM

TOLERANCES UNLESS OTHERWISE SPECIFIED:
0 PLC ±-
1 PLC ±-
2 PLC ±-
3 PLC ±-
4 PLC ±-
ANGLES ±-

MATERIAL: SEE NOTE
FINISH: SEE NOTE

DWN	JACK HOU	17SEP10
CHK	MARTIN LI	17SEP10
APVD	STEVEN YAO	17SEP10
PRODUCT SPEC	SEE NOTE	
APPLICATION SPEC	-	
WEIGHT	-	

TE Connectivity

NAME: SMT TYPE POST HDR ASS'Y(V) WITH BOSS &WITH TAIL TYPE TE CT CONN. 2 mm PITCH)

SIZE	CAGE CODE	DRAWING NO	RESTRICTED TO
A3	00779	C-292174	-

CUSTOMER DRAWING | SCALE 5:1 | SHEET 2 OF 3 | REV C2

THIS DRAWING IS UNPUBLISHED. RELEASED FOR PUBLICATION -,- .
© COPYRIGHT - By - ALL RIGHTS RESERVED.

LOC	DIST
ES	00

REVISIONS

P	LTR	DESCRIPTION	DATE	DWN	APVD
	-	SEE SHEET 1	-	-	-

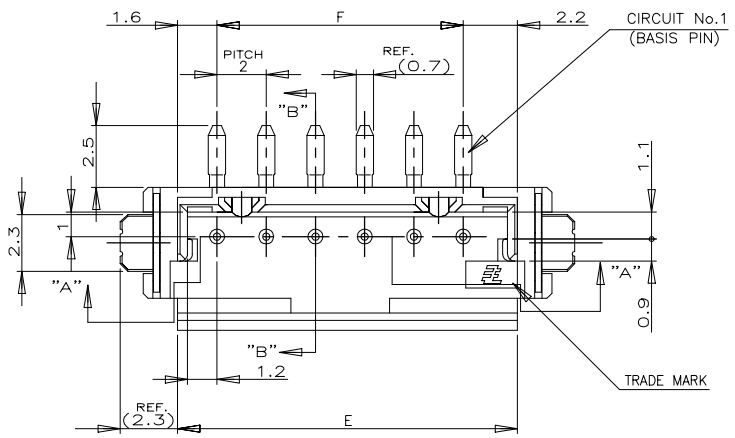

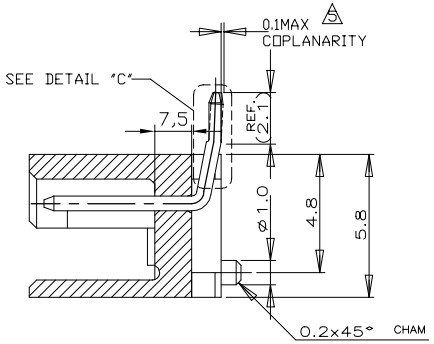

SECT "B"-"B"

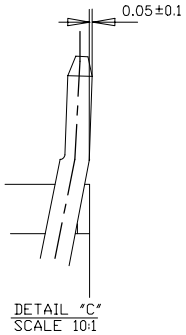

(AS SHOWN : 292174-6)

NOTES;

2. MATERIAL:HSG: NYLON (UL94V-0)
   COLOR:BLACK OR NATURAL
   POST:TIN BRASS
   TAIL:TIN BRASS
3. OCCUPANT AREA ON PC BOARD
4. PRODUCT SPEC :108-60016
5. TO BE MEASURED WITH CONNECTOR PLACED ON HORIZONTAL DATUM SURFACE,FLOAT OF SOLDER TINE AND TAIL FROM DATUM SURFACE IS 0.1mm MAX

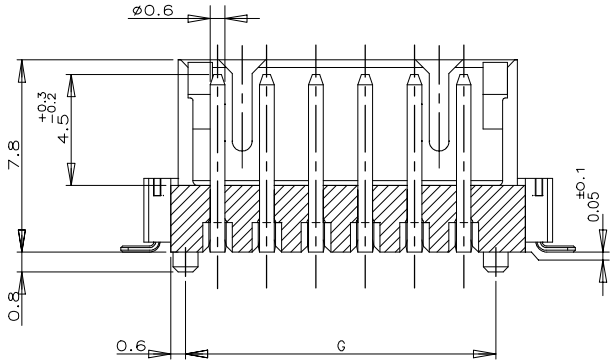

SECT "A"-"A"

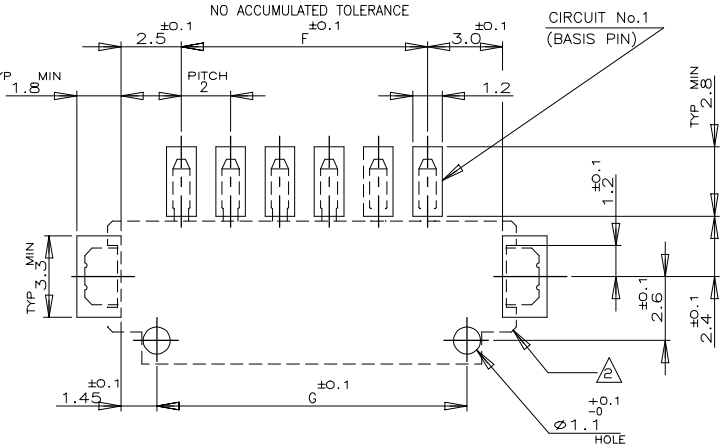

RECOMENOED P.C.BOARD LAYOUT
(P.C.B THK:0.8mm MIN)

12.6	10.0	13.8	6	292174-6
G	F	E	Pos.	NATURAL / P/N

THIS DRAWING IS A CONTROLLED DOCUMENT.

DIMENSIONS: MM

TOLERANCES UNLESS OTHERWISE SPECIFIED:
0 PLC ± -
1 PLC ± -
2 PLC ± -
3 PLC ± -
4 PLC ± -
ANGLES ± -

TOLERANCES UNLESS OTHERWISE SPECIFIED:
10≥* : ±0.2
30≥*>10 : ±0.25
100≥*>30 : ±0.3
ANGEL : ±3°

MATERIAL: SEE NOTE
FINISH: SEE NOTE

DWN JACK HOU 17SEP10
CHK MARTIN LI 17SEP10
APVD STEVEN YAO 17SEP10
PRODUCT SPEC SEE NOTE
APPLICATION SPEC -
WEIGHT -

TE Connectivity

NAME: SMT TYPE POST HDR ASS'Y(V) WITH BOSS &WITH TAIL TYPE TE CT CONN. 2 mm PITCH)

SIZE	CAGE CODE	DRAWING NO	RESTRICTED TO
A3	00779	C-292174	-

CUSTOMER DRAWING | SCALE 5:1 | SHEET 3 OF 3 | REV C2

1470-19 (3/11)

X-ON Electronics

Largest Supplier of Electrical and Electronic Components

Click to view similar products for Headers & Wire Housings ***category:***

Click to view products by TE Connectivity ***manufacturer:***

Other Similar products are found below :

892-18-020-10-001101 58102-G61-06LF 582553-1 0009485154 009176003701906 0050291907 LY20-4P-DT1-P1E-BR 02.125.8002.8 609-3404 61062-3 61082-181009 622-3653LF 63453-116 636-1030 636-1427 636-3427 636-4007 641938-9 641991-4 644827-2 65817-010LF 65817-015LF 65863-015LF 66207-023LF 67095-007LF 67601157 68645-018 68648-049 70.362.1628.0 70-4210 70-4226B 70-4853B 707-5020 707-5028 71.350.2428.0 71918-208LF 71961-016LF 733-134 733-162 754199-000 760-3052 787-8014-00 79531-3000 FCN-360C032-B FCN-367T-T012/H FCN-723D010/2 80.063.4001.1 800-90-001-10-001000 800-90-010-10-002000 801-43-002-10-013000