THIS DRAWING IS UNPUBLISHED. RELEASED FOR PUBLICATION ,2000 .
© COPYRIGHT 2000-2010 BY AMP INCORPORATED.ALL RIGHTS RESERVED.

LOC	DIST
J	

REVISIONS 変更

P	LTR	DESCRIPTION	ECN	DATE	DWN	APVD
	C2	REVISED	ECR-10-016822	12AUG2010	T.K	N.Y

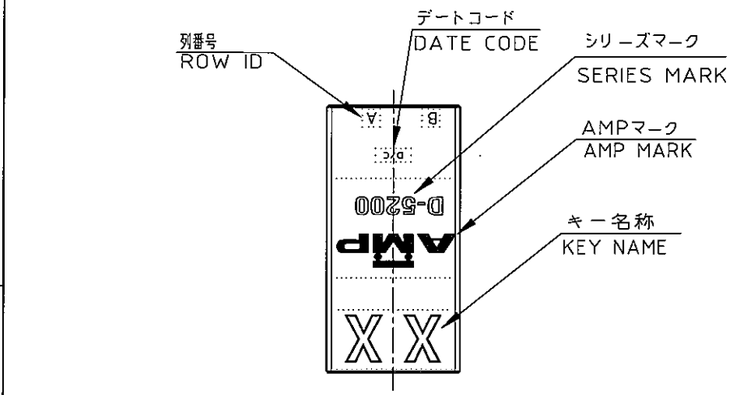

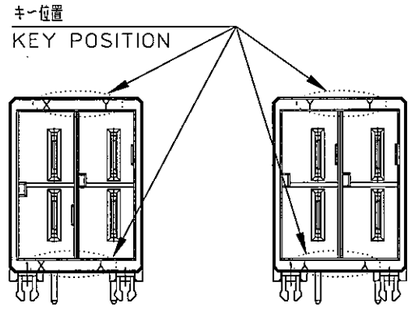

3-1318983-2,-6 (KEYING:XY)

2-1318983-2,-6 (KEYING:YY)

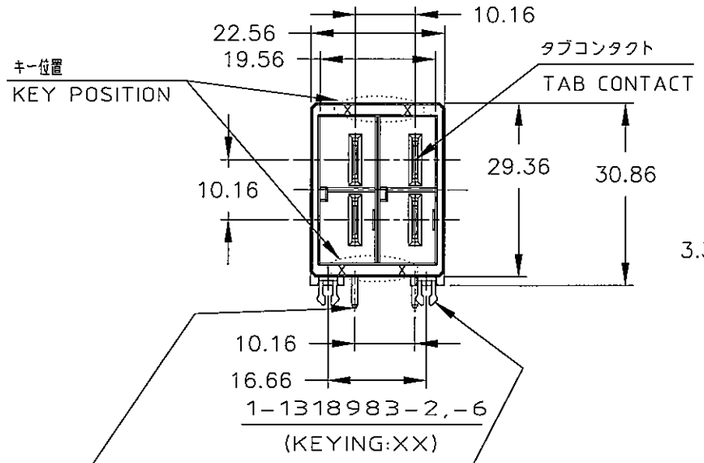

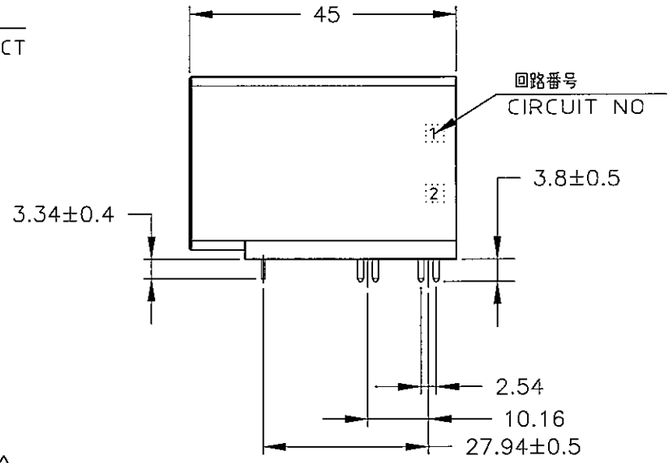

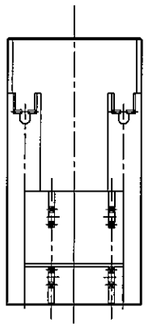

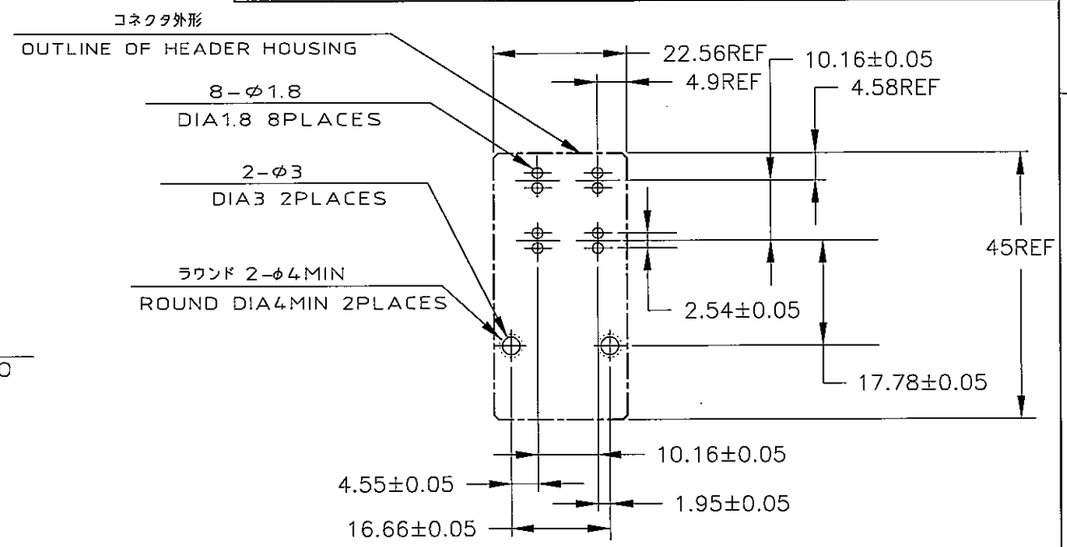

推奨基板取付け穴寸法 (公差: ±0.05)

PC 基板厚:1.6～2.4 ±0.1
(コネクタ搭載面)
RECOMENDED PC BOARD HOLE PATTERN(TOL: ±0.05)
PC BOARD THICKNESS:1.6～2.4±0.1
(CONNECTOR MOUNT SIDE)

注 記

1. 材料:ハウジングガラス入り熱可塑性
ポリエステル樹脂 (94V-0), 色:黒
タブ コンタクト:銅合金
リテンション レグ:黄銅

2. めっき:コンタクト:Ni下地の上に 2.54μ MIN 全面銀めっき
(コンタクト半田付け部: 銀メッキ)

3. めっき:リテンションレグ : ニッケル下地の上にスズめっき

4. めっき:コンタクト:Ni下地の上に 接触部: 0.38μm Min金メッキ
コンタクト半田付け部: スズメッキ

NOTES

1. MATERIAL:HOUSING:GLASS FILED THERMO PLASTIC
,POLYESTER(94V-0),COLOR:BLACK
TAB CONTACT:COPPER ALLOY
RETENTION LEG:BRASS

2. FINISH(CONTACT AREA):ALL OVER 2.54μmMIN SILVER PLATING
(CONTACT TAIL) OVER Ni PLATING

3. FINISH(RETENTION LEG): TIN PLATED OVER NICKEL.

4. FINISH(CONTACT AREA): 0.38μm Min GOLD PLATING OVER NICKEL.
FINISH(CONTACT TAIL): TIN PLATED OVER NICKEL.

XY	4	3-1318983-2
YY	4	2-1318983-2
XX	4	1-1318983-2
XY	2	3-1318983-6
YY	2	2-1318983-6
XX	2	1-1318983-6
KEY TYPE	コンタクトのめっき (FINISH)	製品番号 (PART NO.)

THIS DRAWING IS A CONTROLLED DOCUMENT FOR AMP INCORPORATED. IT IS SUBJECT TO CHANGE AND THE CONTROLLING ENGINEERING ORGANIZATION SHOULD BE CONTACTED FOR THE LATEST REVISION.

DIMENSIONS: 単位 mm

TOLERANCES UNLESS OTHERWISE SPECIFIED
一般公差
1Q ; ±0.3
3Q >10 ; ±0.35
10Q >30 ; ±0.4
ANGLE ; ±3°

MATERIAL 材料: 注記参照 SEE NOTE

FINISH 仕上: 注記参照 SEE NOTE

DWN	K.IKEDA	9/FEB/'00
CHK	Y.KATO	10/FEB/'00
APVD	I.HASEGAWA	10/FEB/'00
PRODUCT SPEC 製品規格	108-5453	
APPLICATION SPEC 取付適用規格	114-5206	
WEIGHT		

WIRE RANGE 抱合電線断面積 | INSULATION DIA 被覆外径

Tyco Electronics Tyco Electronics Corporation Kawasaki,Japan

NAME 名称: 2列 ヘッダーアセンブリー 4P (水平 タイプ)
DOUBLE ROW HEADER ASS'Y 4P("H"TYPE)
<DYNAMIC D-5200D>

SIZE	CAGE CODE	DRAWING NO 番号
A3	00779	1318983

CUSTOMER DRAWING | SCALE 尺度 1-1 | SHEET 1 OF 1 | REV C2

AMP1470-19 REV 10/93

顧 客 用 図 面

X-ON Electronics

Largest Supplier of Electrical and Electronic Components

Click to view similar products for Headers & Wire Housings ***category:***

Click to view products by TE Connectivity ***manufacturer:***

Other Similar products are found below :

892-18-020-10-001101 58102-G61-06LF 582553-1 0009485154 009176003701906 0050291907 LY20-4P-DT1-P1E-BR 02.125.8002.8 609-3404 61062-3 61082-181009 622-3653LF 63453-116 636-1030 636-1427 636-3427 636-4007 641938-9 641991-4 644827-2 65817-010LF 65817-015LF 65863-015LF 66207-023LF 67095-007LF 67601157 68645-018 68648-049 70.362.1628.0 70-4210 70-4226B 70-4853B 707-5020 707-5028 71.350.2428.0 71918-208LF 71961-016LF 733-134 733-162 754199-000 760-3052 787-8014-00 79531-3000 FCN-360C032-B FCN-367T-T012/H FCN-723D010/2 80.063.4001.1 800-90-001-10-001000 800-90-010-10-002000 801-43-002-10-013000