THIS DRAWING IS UNPUBLISHED. RELEASED FOR PUBLICATION -,- .
© COPYRIGHT - By - ALL RIGHTS RESERVED.

REVISIONS

P	LTR	DESCRIPTION	DATE	DWN	APVD
	A12	REVISED PER ECO-17-001761	10MAY2017	RK	AS

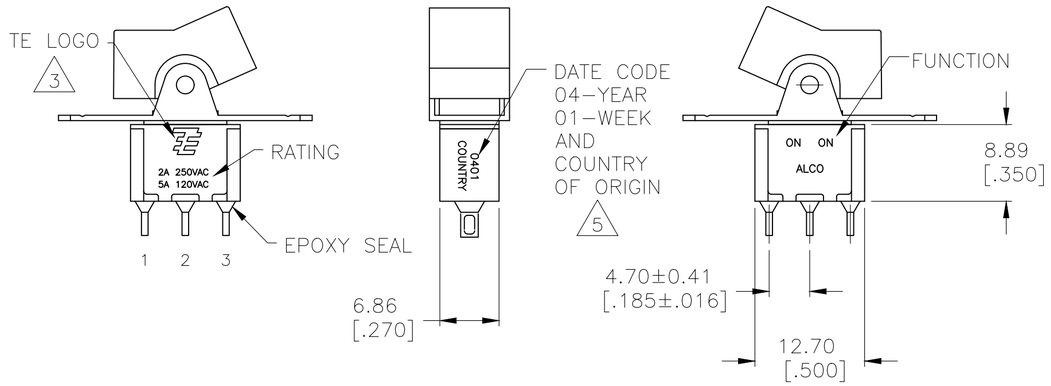

1 ALL MATERIALS AND FINISHES SHALL COMPLY WITH EU DIRECTIVE 2002/95/EC OF 27JAN2003 (ROHS).

2 G CONTACT OPTION CAN BE USED FOR SIGNAL OR POWER LEVEL SWITCHING. IF SWITCH IS USED AT LEVELS EXCEEDING .4VA @ 20V AC/DC, SWITCH IS RENDERED FOR POWER SWITCHING ONLY DUE TO ARC REMOVAL OF GOLD PLATING. RATING MARKED ON SWITCH IS 2A 250VAC, 5A 120VAC.

3 TE CONNECTIVITY LOGO PER PER TEC-202-36.

5 DATE CODE AND COUNTRY OF ORIGIN MAY APPEAR ON EITHER SIDE OF SWITCH.

6 PANEL MOUNT BRACKET SUPPLIED WITH TERMINALS W, Z AND Z3 ONLY.

7 ACTUATOR MARKED [0 -]

8 ACTUATOR MARKED [- 0]

9 ACTUATOR MARKED [-]

10 ALL LOGO, RATING, DATE CODE, AND FUNCTION MARKINGS TO BE LASER MARKED.

11 OBSOLETE

12 GRAY ACTUATOR WITH MODIFIED BRACKET (SUPPORT BRACKET TRIMMED PARALLEL TO THE PCB)

FUNCTION CHART

FUNCTION	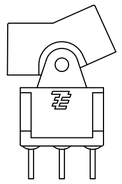 1 2 3	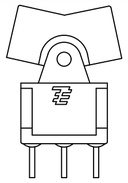 1 2 3	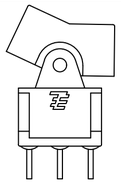 1 2 3
01	ON	NONE	ON
03	ON	OFF	ON
05	(ON)	OFF	(ON)
07	ON	OFF	(ON)
08	ON	NONE	(ON)
TERMINALS CONNECTED	2-3	---	1-2

NONE: NO MECHANICAL POSITION
OFF: MECHANICAL POSITION WITH NO ELECTRICAL CONNECTION
(ON): MOMENTARY ACTION

SPECIFICATIONS

RATING, B CONTACTS	.4VA MAX @20V MAX. AC OR DC
RATING, G CONTACTS-SEE NOTE 2	.4VA MAX @20V MAX. AC OR DC OR
	5A @120 VAC OR 28 VDC (RESISTIVE)
	2A @250 VAC (RESISTIVE)
RATING, Q CONTACTS	5A @120 VAC OR 28 VDC (RESISTIVE)
	2A @250 VAC (RESISTIVE)
ELECTRICAL LIFE	6,000 CYCLES AT RATED LOAD
CONTACT RESISTANCE	10 MILLIOHMS MAX INITIAL @ 2-4VDC, 100MA
INSULATION RESISTANCE	1,000 MEGOHMS MIN
DIELECTRIC WITHSTANDING VOLTAGE	1,000 V RMS AT SEA LEVEL
OPERATING TEMPRATURE	-30C TO 85C

PART NUMBER SEQUENCE CHART

MODEL	FUNCTION	ACTUATOR	TERMINAL	CONTACT	ACTUATOR COLOR	BEZEL COLOR	ROHS
A1							04
	01	J1	A	B	0 BLACK (STD)	0 BLACK (STD)	
	03	J3	AV2	G	1 BROWN	1 BROWN	
	05	J50	C	Q	2 RED	2 RED	
	07	J51	V3		3 ORANGE	3 ORANGE	
	08	J52	V4		4 YELLOW	4 YELLOW	
		J2	V6		5 GREEN	5 GREEN	
		J4	V7		6 BLUE	6 BLUE	
		J60	W		8 GRAY	8 GRAY	
		J61	W4		9 WHITE	9 WHITE	
		J62	Z				
			Z3				

THIS DRAWING IS A CONTROLLED DOCUMENT.

DIMENSIONS: mm [INCHES]

TOLERANCES UNLESS OTHERWISE SPECIFIED:
0 PLC ± -
1 PLC ± -
2 PLC ± -
3 PLC ± 0.25[0.01]
4 PLC ± -
ANGLES ± 4°

MATERIAL -
FINISH -

DWN M.BINNER 06JAN05
CHK M.ZITTO 06JAN05
APVD M.ZITTO 06JAN05
PRODUCT SPEC —
APPLICATION SPEC —
WEIGHT

TE Connectivity

NAME GEMINI A SERIES ROCKER SWITCH SINGLE POLE

SIZE A2 | CAGE CODE 00779 | DRAWING NO C-1571986 | RESTRICTED TO —

CUSTOMER DRAWING | SCALE 2:1 | SHEET 1 OF 5 | REV A12

1571986

1471-9 (1/15)

THIS DRAWING IS UNPUBLISHED. RELEASED FOR PUBLICATION -,- .
© COPYRIGHT - By - ALL RIGHTS RESERVED.

REVISIONS

P	LTR	DESCRIPTION	DATE	DWN	APVD
	-	SEE SHEET 1	-	-	-

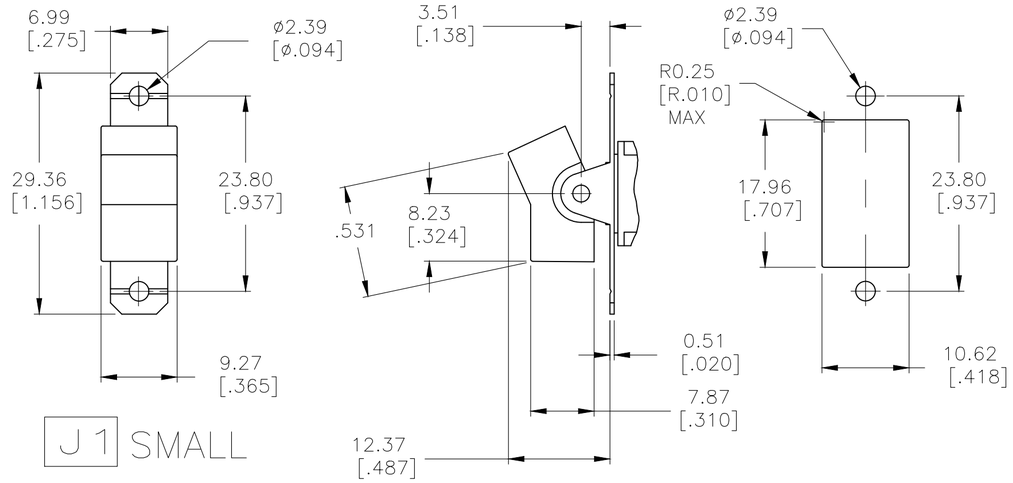

J1 SMALL

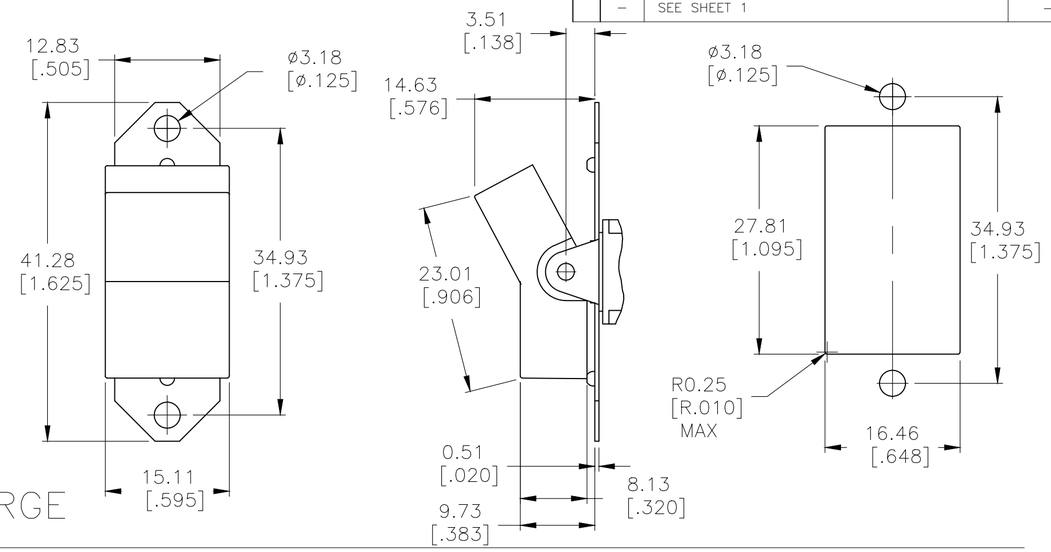

J3 LARGE

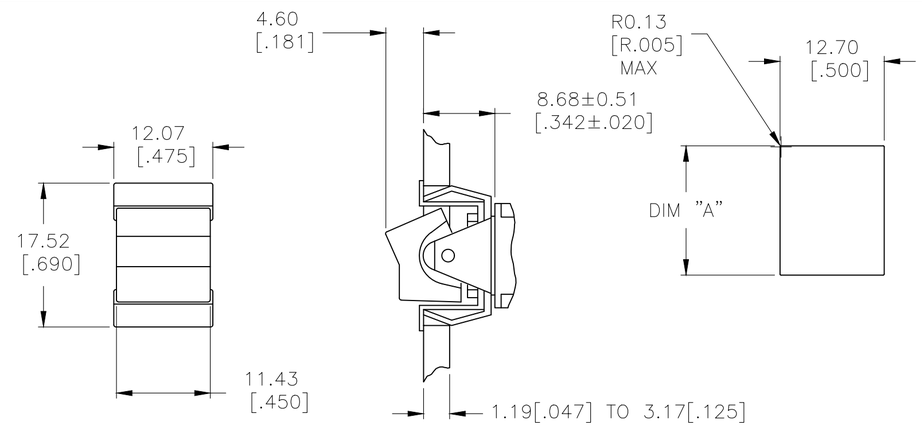

J50 SNAP-IN

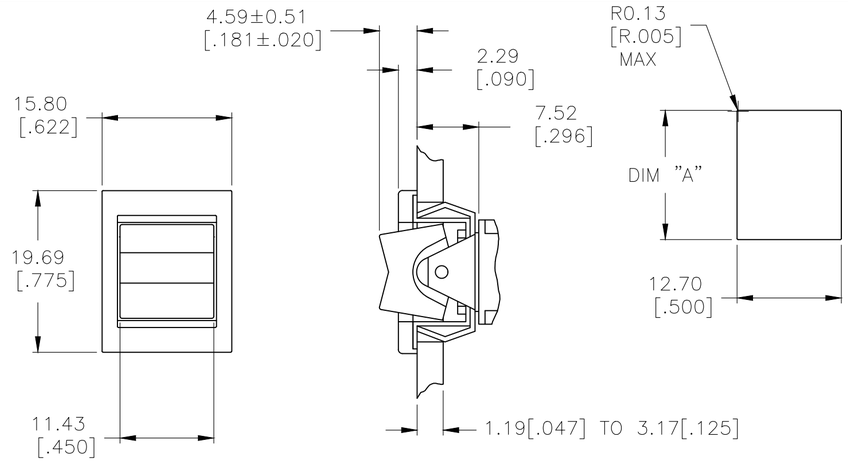

J51 SNAP-IN WITH BEZEL

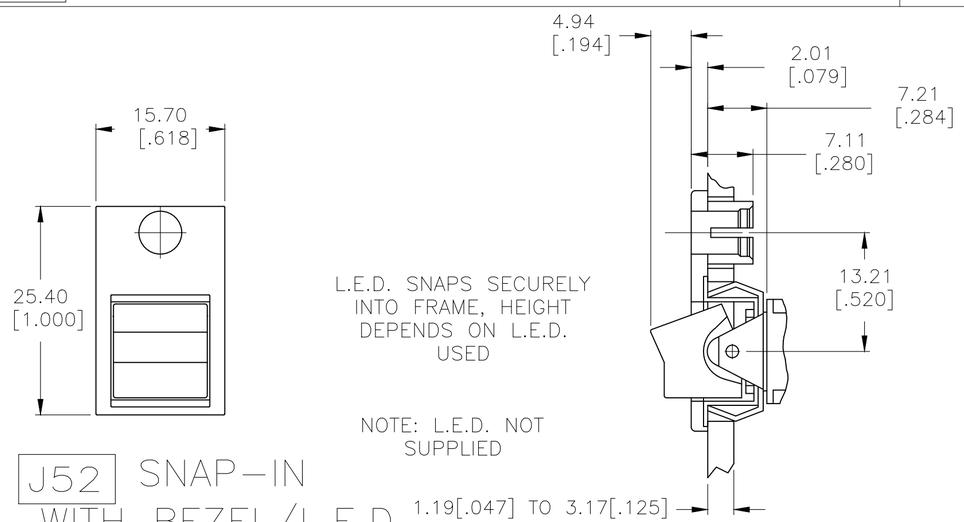

L.E.D. SNAPS SECURELY INTO FRAME, HEIGHT DEPENDS ON L.E.D. USED

NOTE: L.E.D. NOT SUPPLIED

J52 SNAP-IN WITH BEZEL/L.E.D.

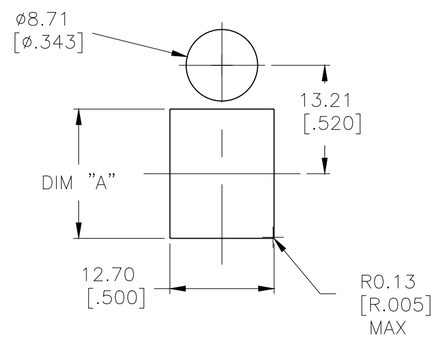

1.52[.060]-3.17[.125]	15.75[.620]-15.87[.625]
1.19[.047]-1.50[.059]	15.72[.619]
PANEL THICKNESS	DIM "A"

THIS DRAWING IS A CONTROLLED DOCUMENT.

DIMENSIONS: mm [INCHES]

TOLERANCES UNLESS OTHERWISE SPECIFIED:
0 PLC ± -
1 PLC ± -
2 PLC ± -
3 PLC ± 0.25[0.01]
4 PLC ± -
ANGLES ± 4°

MATERIAL -
FINISH -

DWN M.BINNER 06JAN05
CHK M.ZITTO 06JAN05
APVD M.ZITTO 06JAN05
PRODUCT SPEC —
APPLICATION SPEC —
WEIGHT —

TE Connectivity

NAME GEMINI A SERIES ROCKER SWITCH SINGLE POLE

SIZE	CAGE CODE	DRAWING NO	RESTRICTED TO
A2	00779	C-1571986	—

CUSTOMER DRAWING | SCALE 2:1 | SHEET 2 OF 5 | REV A12

1571986

THIS DRAWING IS UNPUBLISHED. RELEASED FOR PUBLICATION -,- .
© COPYRIGHT - By - ALL RIGHTS RESERVED.

REVISIONS					
P	LTR	DESCRIPTION	DATE	DWN	APVD
	-	SEE SHEET 1	-	-	-

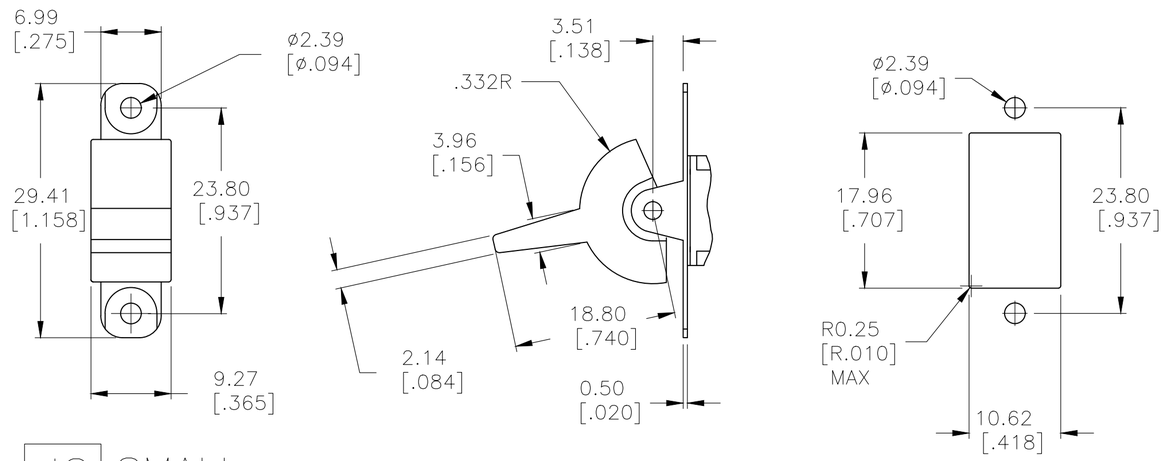

J2 SMALL

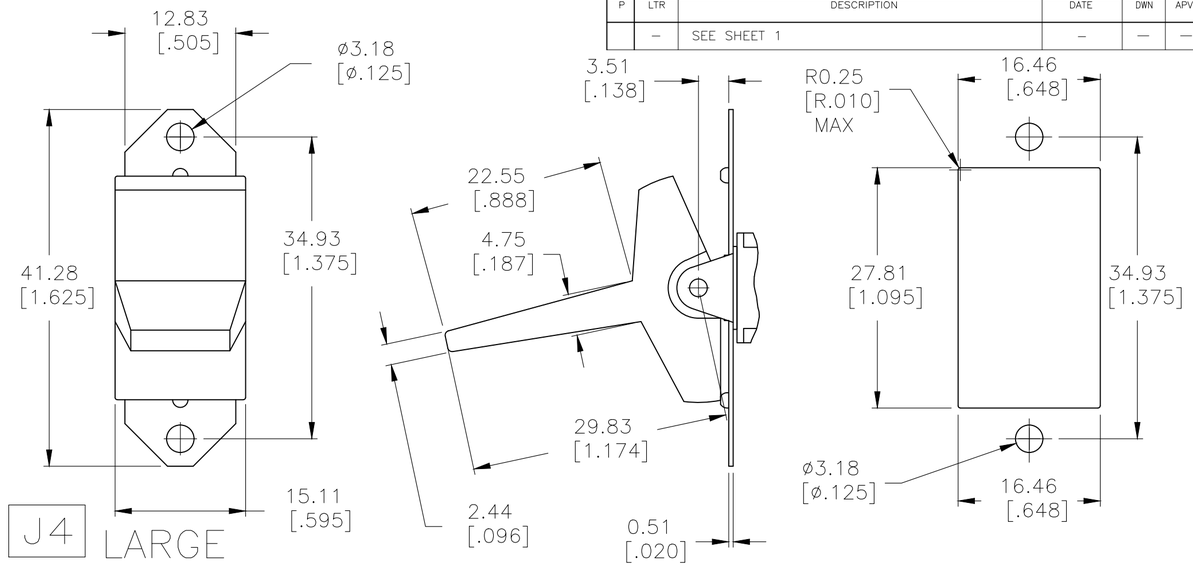

J4 LARGE

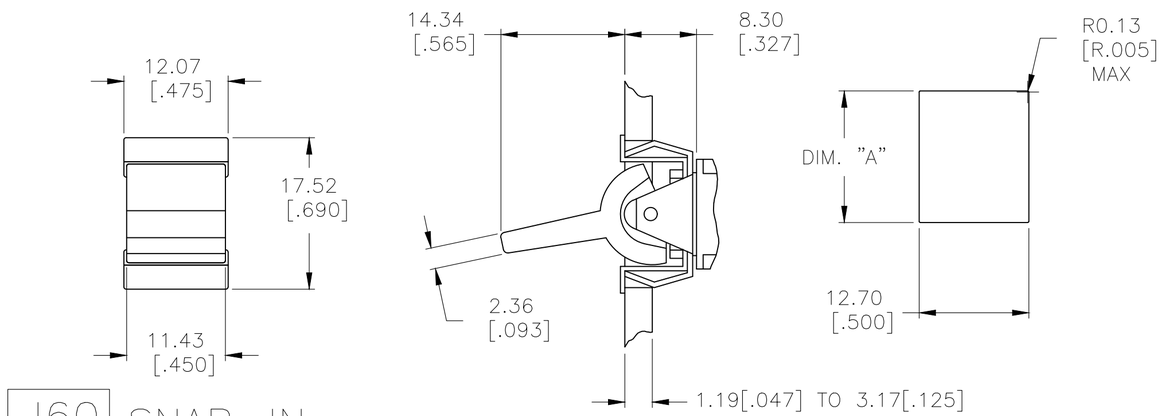

J60 SNAP-IN

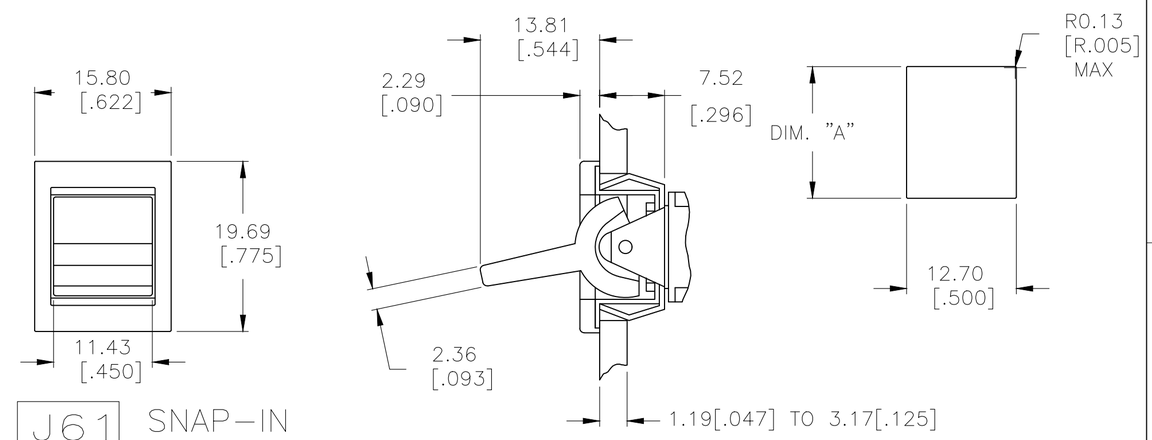

J61 SNAP-IN WITH BEZEL

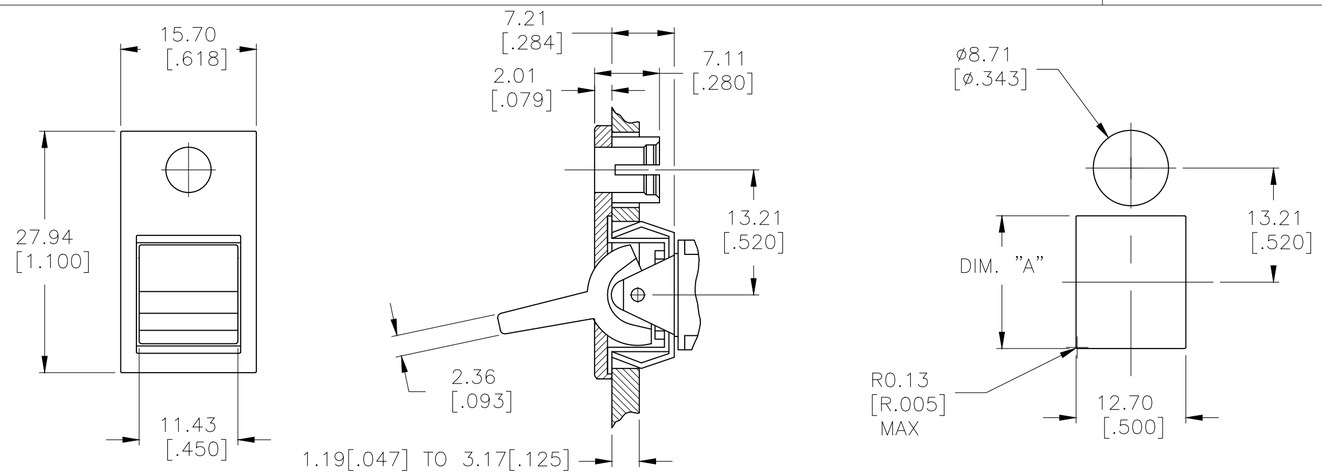

J62 SNAP-IN WITH BEZEL/L.E.D.

NOTE: L.E.D. NOT SUPPLIED

1.52[.060]-3.17[.125]	15.75[.620]-15.87[.625]
1.19[.047]-1.50[.059]	15.72[.619]
PANEL THICKNESS	DIM "A"

THIS DRAWING IS A CONTROLLED DOCUMENT.

DIMENSIONS: mm [INCHES]

TOLERANCES UNLESS OTHERWISE SPECIFIED:
0 PLC ± -
1 PLC ± -
2 PLC ± -
3 PLC ± 0.25[0.01]
4 PLC ± -
ANGLES ± 4°

MATERIAL -
FINISH -

DWN M.BINNER 06JAN05
CHK M.ZITTO 06JAN05
APVD M.ZITTO 06JAN05
PRODUCT SPEC —
APPLICATION SPEC —
WEIGHT —

TE Connectivity

NAME GEMINI A SERIES ROCKER SWITCH SINGLE POLE

SIZE	CAGE CODE	DRAWING NO	RESTRICTED TO
A2	00779	C-1571986	—

CUSTOMER DRAWING | SCALE 2:1 | SHEET 3 OF 5 | REV A12

1571986

1471-9 (1/15)

THIS DRAWING IS UNPUBLISHED. RELEASED FOR PUBLICATION -,- .
© COPYRIGHT - By - ALL RIGHTS RESERVED.

REVISIONS

P	LTR	DESCRIPTION	DATE	DWN	APVD
	-	SEE SHEET 1	-	-	-

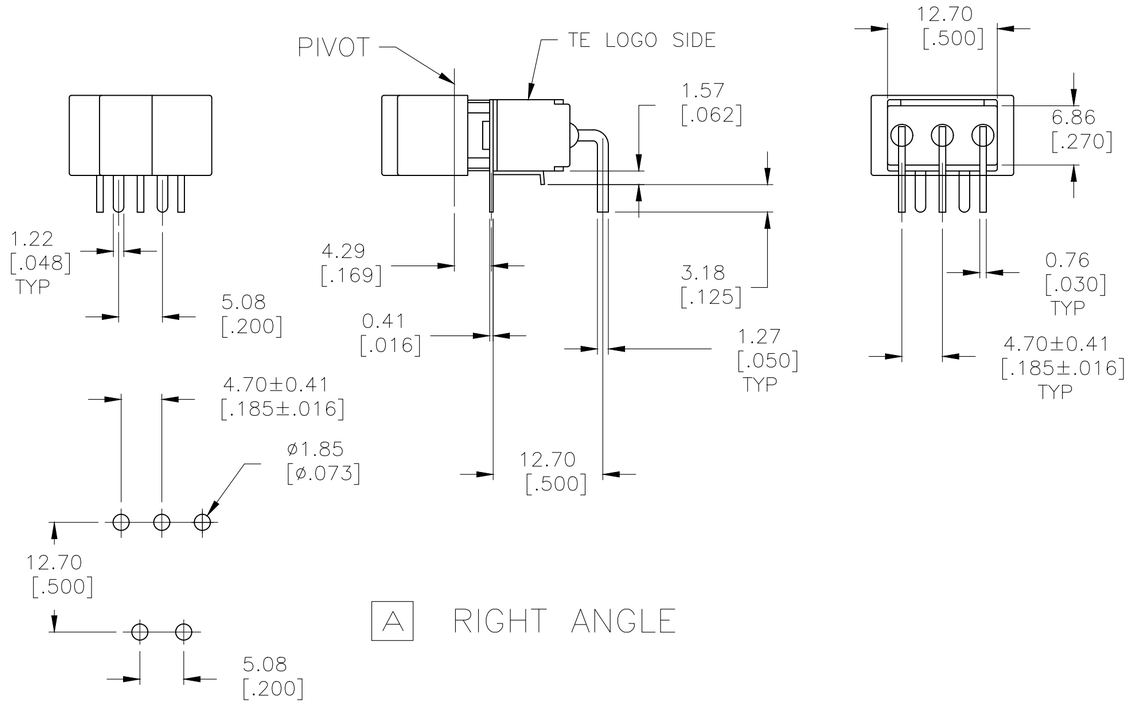

A RIGHT ANGLE

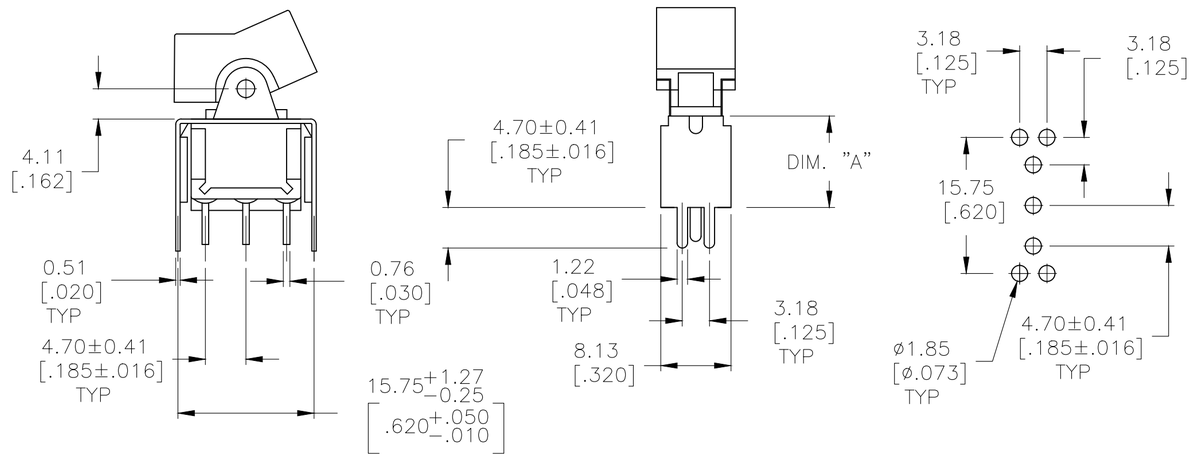

V3	V4

VERTICAL SUPPORT BRACKET

OPTION CODE	DIM "A"
V3	11.68[.460]
V4	16.00[.630]

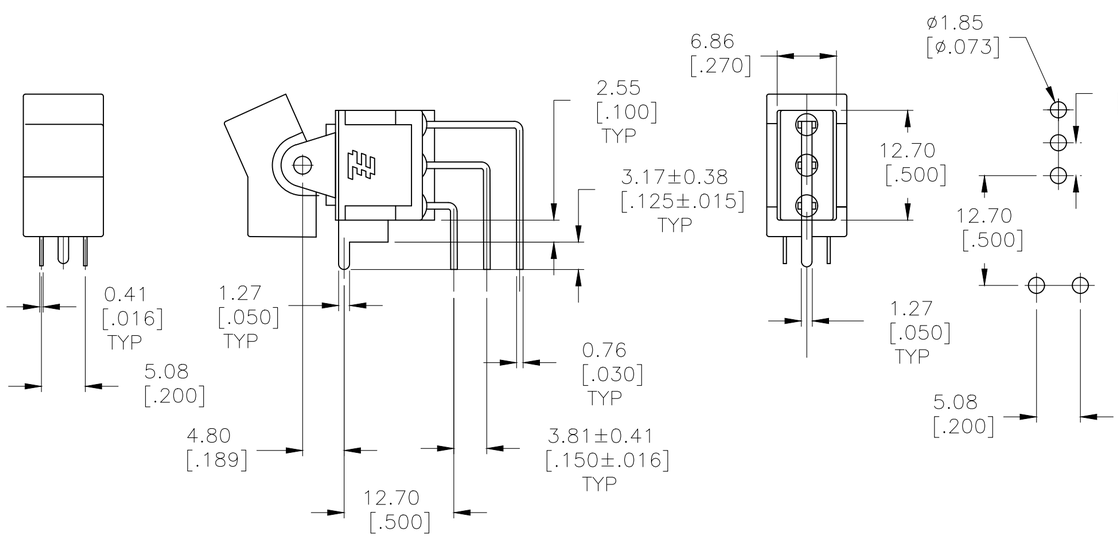

AV2 VERTICAL RIGHT ANGLE

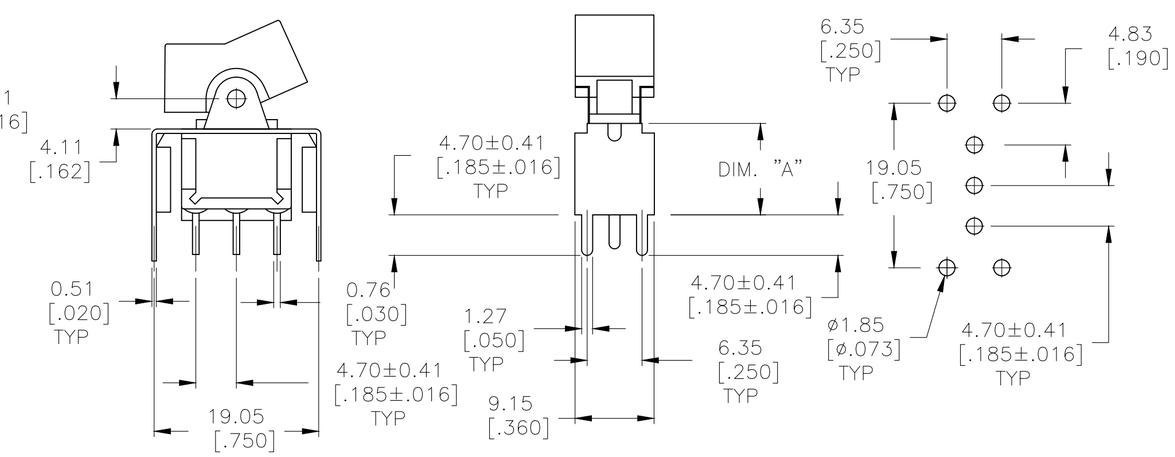

V6	V7

VERTICAL SUPPORT BRACKET

OPTION CODE	DIM "A"
V6	11.68[.460]
V7	16.00[.630]

THIS DRAWING IS A CONTROLLED DOCUMENT.

DIMENSIONS: mm [INCHES]

TOLERANCES UNLESS OTHERWISE SPECIFIED:
0 PLC ± -
1 PLC ± -
2 PLC ± -
3 PLC ± 0.25[0.01]
4 PLC ± -
ANGLES ± 4°

MATERIAL -
FINISH -

DWN M.BINNER 06JAN05
CHK M.ZITTO 06JAN05
APVD M.ZITTO 06JAN05
PRODUCT SPEC —
APPLICATION SPEC —
WEIGHT —

TE Connectivity

NAME GEMINI A SERIES ROCKER SWITCH SINGLE POLE

SIZE	CAGE CODE	DRAWING NO	RESTRICTED TO
A2	00779	C-1571986	—

CUSTOMER DRAWING SCALE 2:1 SHEET 4 OF 5 REV A12

1571986

THIS DRAWING IS UNPUBLISHED. RELEASED FOR PUBLICATION -,- .
© COPYRIGHT - By - ALL RIGHTS RESERVED.

REVISIONS

P	LTR	DESCRIPTION	DATE	DWN	APVD
	-	SEE SHEET 1	-	-	-

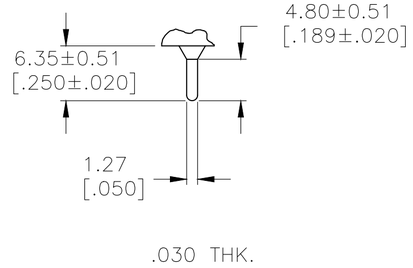

C PRINTED CIRCUIT

MATERIALS CHART

COMPONENT NAME	BASE MATERIAL	FINISH
CASE	DAP, 30-40% GF, RED, UL94 V-0, COSMIC D72/6120F	
FRAME	304 STAINLESS STEEL	
B TERMINALS & CONTACTS	C194 COPPER	GOLD OVER NICKEL
G TERMINALS & CONTACTS	C194 COPPER	GOLD OVER SILVER
Q TERMINALS & CONTACTS	C194 COPPER	SILVER
ACTUATOR	PHENOLIC, BLACK, UL94 V-1	
ROCKER CAP	NYLON, BLACK, UL94 V-1, NYTEX MG-2012N	
BUSHING & ACTUATOR LEVER	ZINC ALLOY K2	.000100-.000150 NICKEL
SPRING	MUSIC WIRE	
SUPPORT BRACKET	C2680H BRASS	TIN
PIVOT PIN	STEEL	NICKEL
TERMINAL SEAL	EPOXY, UL94 V-1, BOOM HOUSE S-9001A	

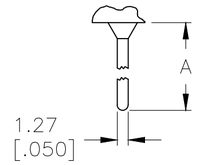

OPTION	DIM A
W	18.69[.736]
W4	26.97[1.062]

W W4 WIRE WRAP

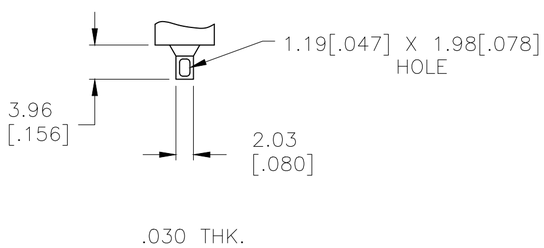

Z WIRE LUG

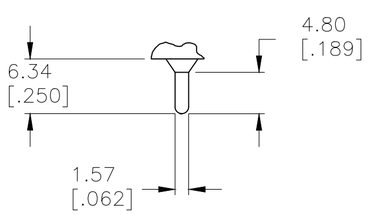

Z3 QUICK CONNECT

ALCO P/N	P/N
A101J1AV2Q004AM9	7-1571986-4
A101J1AV2Q004AM8	7-1571986-3
A101J1AV2Q004AM	7-1571986-2
A108J61ZQ0004	7-1571986-0
A108J51ZQ0004	6-1571986-9
A108J1ZQ004	6-1571986-8
A108J1V3Q004	6-1571986-7
A107J61ZQ0004	6-1571986-6
A107J51ZQ0004	6-1571986-5
A105J61ZQ0004	6-1571986-4
A105J61ZG0004	6-1571986-3
A105J52ZQ2004	6-1571986-2
A105J51ZQ0004	6-1571986-1
A105J4ZQ004	6-1571986-0
A105J3ZQ004	5-1571986-9
A105J3CQ2004	5-1571986-8
A105J3CQ004	5-1571986-7
A105J2ZQ004	5-1571986-6
A105J2AV2Q004	5-1571986-5
A105J2AQ004	5-1571986-4
A105J1ZQ004	5-1571986-3
A105J1V3B004	5-1571986-2
A105J1CQ004	5-1571986-1

ALCO P/N	P/N
A105J1AV2Q004	5-1571986-0
A105J1AQ004	4-1571986-9
NOT ASSIGNED	4-1571986-8
A103J1AV2Q004MB	4-1571986-7
A103J61ZQ0004	4-1571986-6
A103J51ZQ0004	4-1571986-5
A103J3ZQ004	4-1571986-4
A103J2ZQ004	4-1571986-3
A103J2CB004	4-1571986-2
A103J1ZQ004	4-1571986-1
A103J1V3Q004	4-1571986-0
A103J1AV2Q004	3-1571986-9
A103J1AV2B004	3-1571986-8
NOT ASSIGNED	3-1571986-7
A101J61ZQ0004	3-1571986-6
A101J51ZQ2004	3-1571986-5
A101J51ZQ0004	3-1571986-4
A101J51ZB0004	3-1571986-3
NOT ASSIGNED	3-1571986-2
A101J51Z3Q0004	3-1571986-1
A101J51Z3G0004	3-1571986-0
A101J51CB0004	2-1571986-9
A101J50ZQ004	2-1571986-8
A101J50V3Q204	2-1571986-7
A101J50V3Q004	2-1571986-6
A101J50AV2Q004	2-1571986-5
A101J4ZQ804	2-1571986-4
A101J4ZQ004	2-1571986-3
A101J3ZQ004	2-1571986-2
A101J3V3Q204	2-1571986-1
A101J2ZQ004	2-1571986-0
A101J2ZB904	1-1571986-9
A101J2AV2Q004	1-1571986-8
A101J1ZQ004	1-1571986-7
A101J1ZB004	1-1571986-6
A101J1V3Q004	1-1571986-5
A101J1V3B004	1-1571986-4
A101J1CQ004	1-1571986-3
A101J1CG004	1-1571986-2
A101J1AV2Q004	1-1571986-1
A101J1AV2B004	1-1571986-0
A101J1AQ204	1571986-9
A101J1AQ004	1571986-8
A101J1AB004	1571986-7
NOT ASSIGNED	1571986-6
NOT ASSIGNED	1571986-5
NOT ASSIGNED	1571986-4
NOT ASSIGNED	1571986-3
NOT ASSIGNED	1571986-2
A101J1AB004	1571986-1

ALCO P/N	P/N

1571986

THIS DRAWING IS A CONTROLLED DOCUMENT.

DIMENSIONS: mm [INCHES]

TOLERANCES UNLESS OTHERWISE SPECIFIED:
0 PLC ± -
1 PLC ± -
2 PLC ± -
3 PLC ± 0.25[0.01]
4 PLC ± -
ANGLES ± 4°

MATERIAL -
FINISH -

DWN M.BINNER 06JAN05
CHK M.ZITTO 06JAN05
APVD M.ZITTO 06JAN05
PRODUCT SPEC —
APPLICATION SPEC —
WEIGHT —

TE Connectivity

NAME GEMINI A SERIES ROCKER SWITCH SINGLE POLE

SIZE A2 | CAGE CODE 00779 | DRAWING NO C-1571986 | RESTRICTED TO —

CUSTOMER DRAWING | SCALE 2:1 | SHEET 5 OF 5 | REV A12

X-ON Electronics

Largest Supplier of Electrical and Electronic Components

Click to view similar products for Rocker Switches ***category:***

Click to view products by TE Connectivity ***manufacturer:***

Other Similar products are found below :

VKD2GHNB-00000-000 VSD2GNNB-00000-000 6-1571986-5 6-1571986-9 632422-4B-KD 7036WWCDBX653+U622 8055K52Z7V 8138K20E6M50 FMC18A2200002 84206L 84312LX PREDD4-07F-BB0FW PREDD5-07F-BB0GW PRFDD1-16F-BB000 PRFDD3-16F-BB000 1-1634201-0 999-16702-001 A101J2ZQ004 A101J4ZQ004 A101J51CB0004 A107J51ZQ0004 A201J1AQ004 A201J1AV2Q004 A201J3ZB004 A201J50ZQ004 A203J51ZQ0004 A226L11YZQ A22L11A A435S1YZQ H8500XBBBBL-A H8653VBBG2577W HB130CHNWWNAAC 1251.0303 AE205J60V3B004 RH110C2NBB 1352.0107 1363.0201 AML25GBF2AA03GR 1571099-3 1571987-4 1571987-5 1571989-7 B123J77V7B2 B226J50W4Q22P B433J37ZQ22M 160212E 1801.1164 1831.1102 1833.3402 1837.1118