THIS DRAWING IS UNPUBLISHED. RELEASED FOR PUBLICATION 20
© COPYRIGHT 20 Y ALL RIGHTS RESERVED.

LOC	DIST
H	-

REVISIONS

P	LTR	DESCRIPTION	DATE	DWN	APVD
	G1	Adhesive tape width changed back to 6 mm	05FEB2016	SS	PS

REFERENCE MATING INTERFACE PATTERN:
1,27 STAGGERED PITCH x 1,5 ROW-DISTANCE.

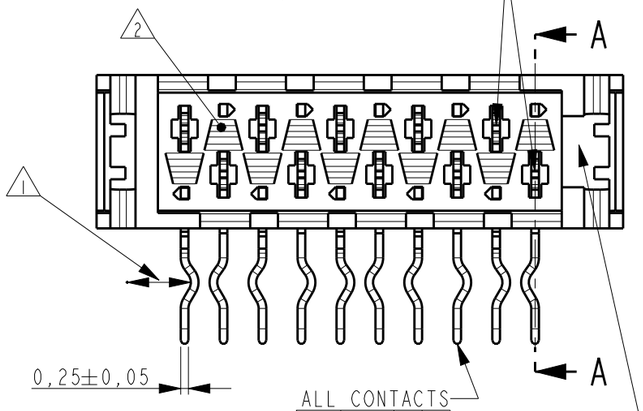

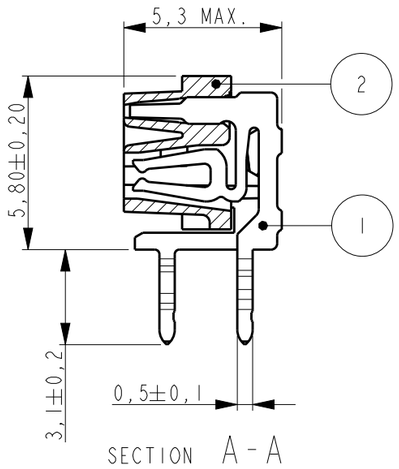

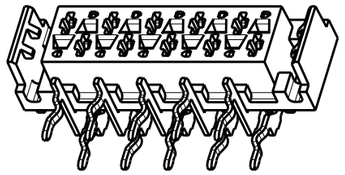

SCALE 3:1

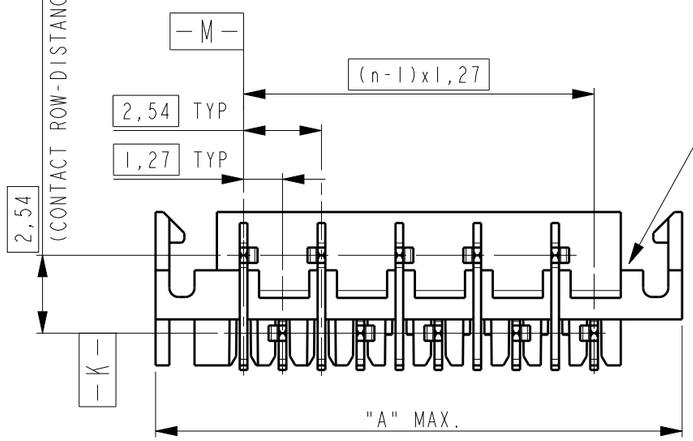

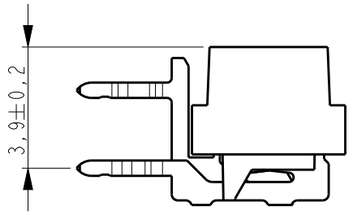

PART NUMBER REEL PACKAGING	NR. OF POS "n"	"A" MAX
338070-4	4	9,7
338070-6	6	12,2
338070-8	8	14,7
1-338070-0	10	17,3
1-338070-2	12	19,8
1-338070-4	14	22,4
1-338070-6	16	24,9
1-338070-8	18	27,4
2-338070-0	20	30,0

NOTES:

1. IN EACH ROW, DIRECTION OF KINKS STARTS RANDOM.
   IN EACH ROW, SEQUENTIAL CONTACTS HAVE OPPOSITE KINK DIRECTIONS.
2. CORING-OUTS FOR MANUFACTURING PURPOSE ONLY.
   SHAPE MAY VARY, BUT IS NOT FUNCTIONAL FOR THE APPLICATION.
3. SHOWN IS A 10 POSITION CONNECTOR.
4. THIS AREA IS RESERVED FOR CONTACTS.

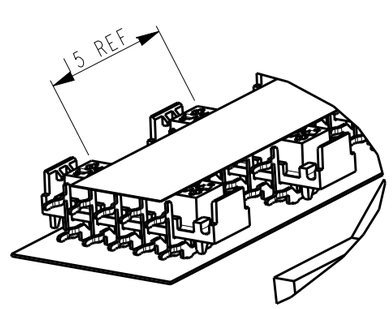

DETAIL A
SCALE 2:1

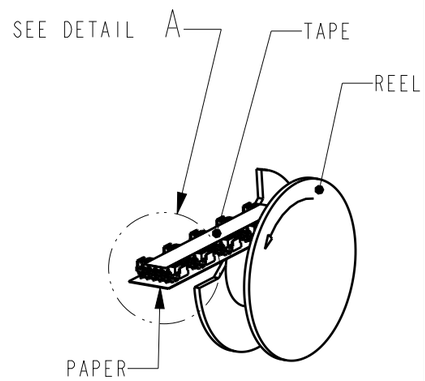

SCALE 1:2

REEL PACKAGING
DEREELING DIRECTIOM AND CONNECTOR POSITION.
QUANTITY 2500 CONNECTORS PER REEL FOR ALL PART NUMBER,

PC-BOARD HOLE LAYOUT
(COMPONENT SIDE OF BOARD SHOWN)

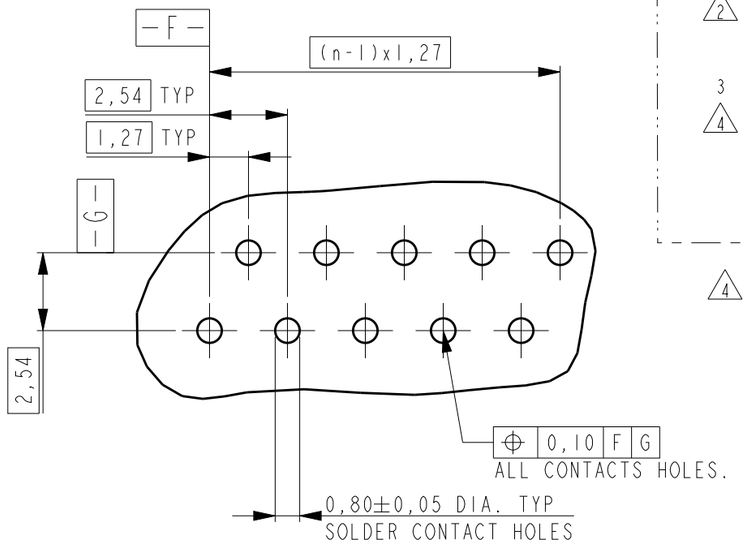

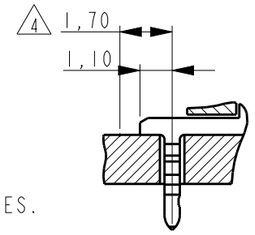

ITEM NO.	DESCRIPTION	MATERIAL	FINISH / COLOR
2	HOUSING	G.F. POLYESTER PBT	RED
1	FEMALE CONTACT	PHOSPHOR BRONZE	TIN OVER NICKEL

THIS DRAWING IS A CONTROLLED DOCUMENT.

DIMENSIONS: mm

TOLERANCES UNLESS OTHERWISE SPECIFIED:
0 PLC ±-
1 PLC ±-
2 PLC ±-
3 PLC ±-
4 PLC ±-
ANGLES ±1°

MATERIAL -
FINISH -

DWN 03-JUN-96 DENNIS KESSLER
CHK - HUUB VAN DELFT
APVD - ERIC LEIJTENS
PRODUCT SPEC 108-19052
APPLICATION SPEC -
WEIGHT -

TE Connectivity

NAME CONNECTOR, FEMALE-ON-BOARD, SIDE-ENTRY, THRU-HOLE, WITH LATCHES, Micro-MaTch

SIZE	CAGE CODE	DRAWING NO	RESTRICTED TO
A3	00779	C-338070	-

Customer Drawing | SCALE 5:1 | SHEET 1 OF 1 | REV G1

X-ON Electronics

Largest Supplier of Electrical and Electronic Components

Click to view similar products for Headers & Wire Housings ***category:***

Click to view products by TE Connectivity ***manufacturer:***

Other Similar products are found below :

892-18-020-10-001101 58102-G61-06LF 582553-1 0009485154 009176003701906 0050291907 LY20-4P-DT1-P1E-BR 02.125.8002.8 609-3404 61062-3 61082-181009 622-3653LF 63453-116 636-1030 636-1427 636-3427 636-4007 641938-9 641991-4 644827-2 65817-010LF 65817-015LF 65863-015LF 66207-023LF 67095-007LF 67601157 68645-018 68648-049 70.362.1628.0 70-4210 70-4226B 70-4853B 707-5020 707-5028 71.350.2428.0 71918-208LF 71961-016LF 733-134 733-162 754199-000 760-3052 787-8014-00 79531-3000 FCN-360C032-B FCN-367T-T012/H FCN-723D010/2 80.063.4001.1 800-90-001-10-001000 800-90-010-10-002000 801-43-002-10-013000