DO NOT SCALE | DIMENSIONS IN MM.

C.A.D. FILE CODE S. C344075.C

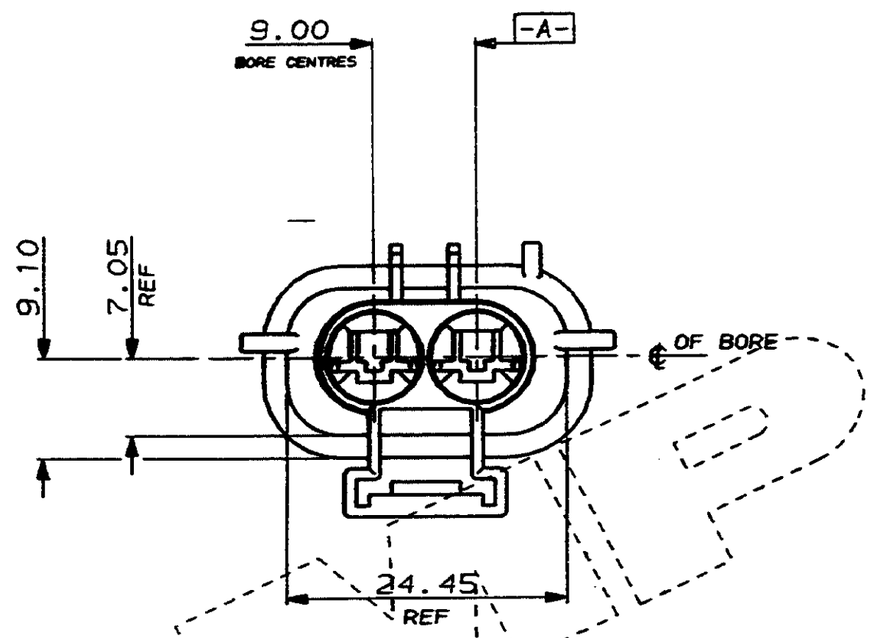

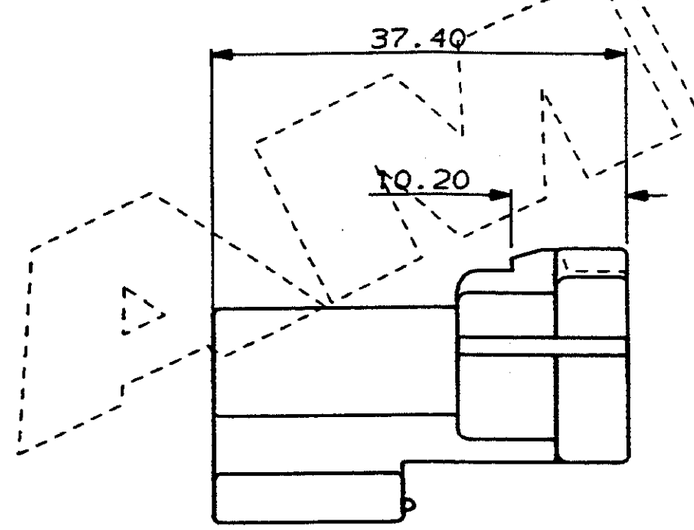

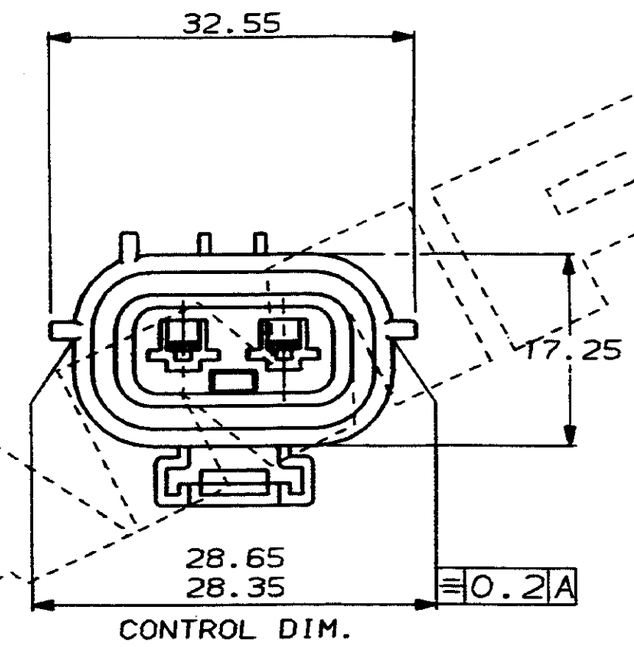

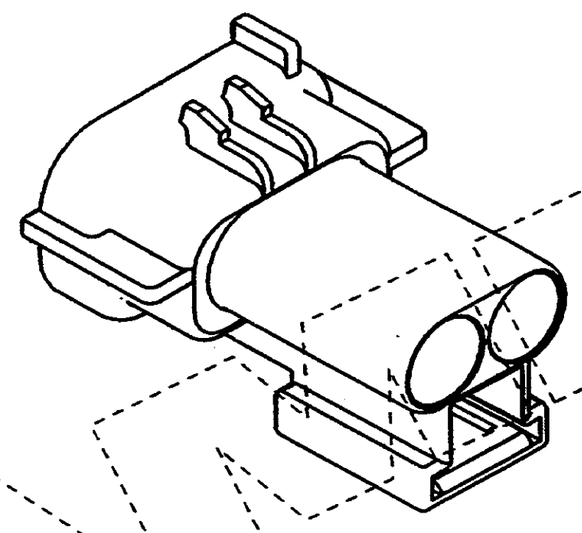

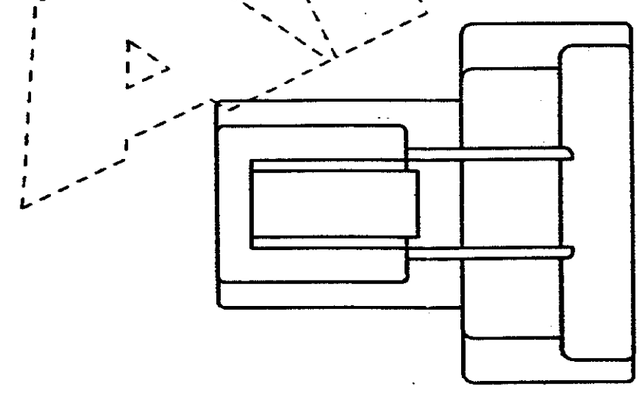

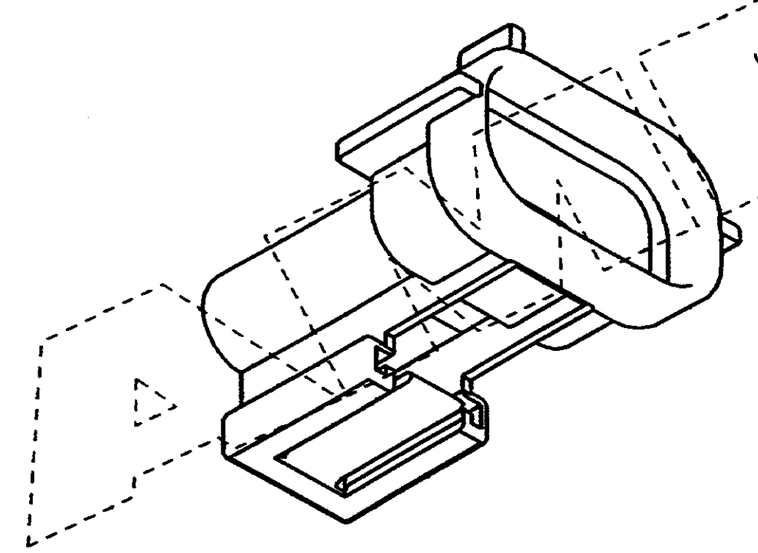

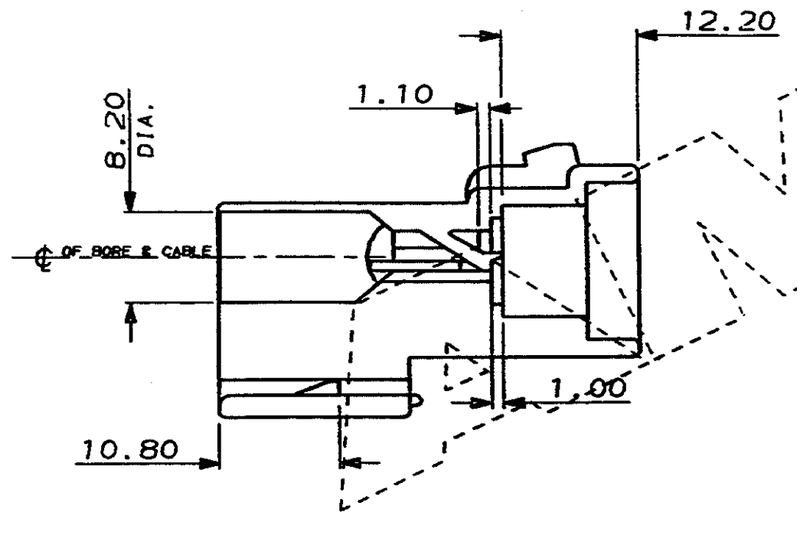

WHITE	NYLON 66	344075-4
BLUE	NYLON 66	344075-3
RED	NYLON 66	344075-2
BLACK	NYLON 66	344075-1
FINISH	MATERIAL	PART NUMBER

CUSTOMER DWG
FOR REFERENCE ONLY

©COPYRIGHT 1987 BY AMP of GREAT BRITAIN LTD. ALL INTERNATIONAL RIGHTS RESERVED. ALL PRODUCTS MAY BE COVERED BY BRITISH AND FOREIGN PATENTS AND/OR PATENTS PENDING.

RELEASED FOR PUBLICATION 22/06/87

REV	APPROVED	ECN	DATE
-	-	-	-
-	-	-	-
-	-	-	-
C	ADDED -2,-3 & -4	CS083	2.12.91
B	UPDATED	CS241	13.4.89
A	UPDATED	CS004	15.7.88
0	REL. FOR PROD.	C4754	11.3.88

TOLERANCES UNLESS OTHERWISE STATED : DEC ± 0.5 ANGLES ± 1°

DR. I.J. 19/06/87
CH. R.J.S. APP. B.J.

AMP of Great Britain Ltd.
TERMINAL HOUSE STANMORE MIDDX.

NAME: 2 WAY TAB HSG. ECONOSEAL 3 HIGH CURRENT

SCALE	LOC	SIZE	DWG.No.	REV	SHEET
2/1	E	A2	C344075	C	1/1

FORMAT 22/05/85

X-ON Electronics

Largest Supplier of Electrical and Electronic Components

Click to view similar products for Automotive Connectors ***category:***

Click to view products by TE Connectivity ***manufacturer:***

Other Similar products are found below :

003-018-000 60403001 60993906-B M902-2131 M902-2161 72.330.1035.1 73.353.4028.0 F119300-B F166900 F258300-B F358300-B F407400 F444110 F487000 F509500B-B 827153-1 8N1515-32-24P 9-1326729-8 925474-1 928905-1 964562-4 968782-1 GT17SA-8DS-HU 98891-1012 98947-1016 12004147 12004475-L 12010290 12010309-B 12015454 12020219-B 12020308 12041318-B 12052225-L 12052466 12059125 12064869 12004327-B 12010503-B 12015308 12015384 12015909 1-21030-1 12041254 12041318 12047946-B 12047957 12047957-L 12059473 12066261