THIS DRAWING IS UNPUBLISHED. RELEASED FOR PUBLICATION . . - -
© COPYRIGHT - By - ALL RIGHTS RESERVED.

REVISIONS

P	LTR	DESCRIPTION	DATE	DWN	APVD
	K1	REVISED PER ECR-19-011103	23JUL2019	BDA	SW

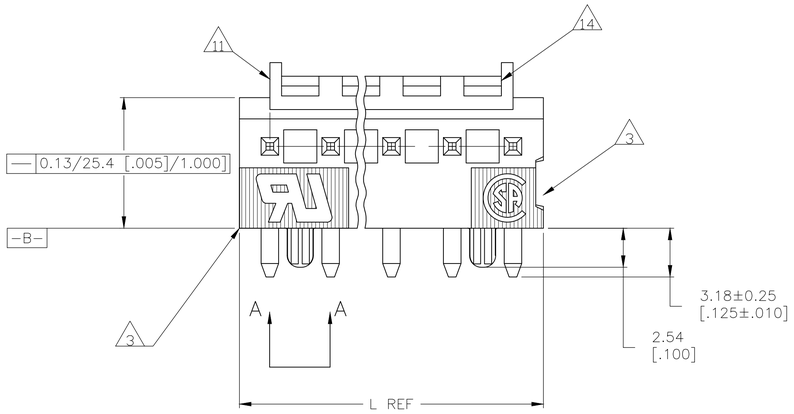

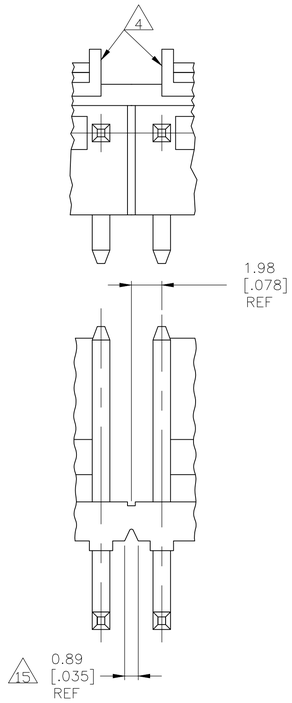

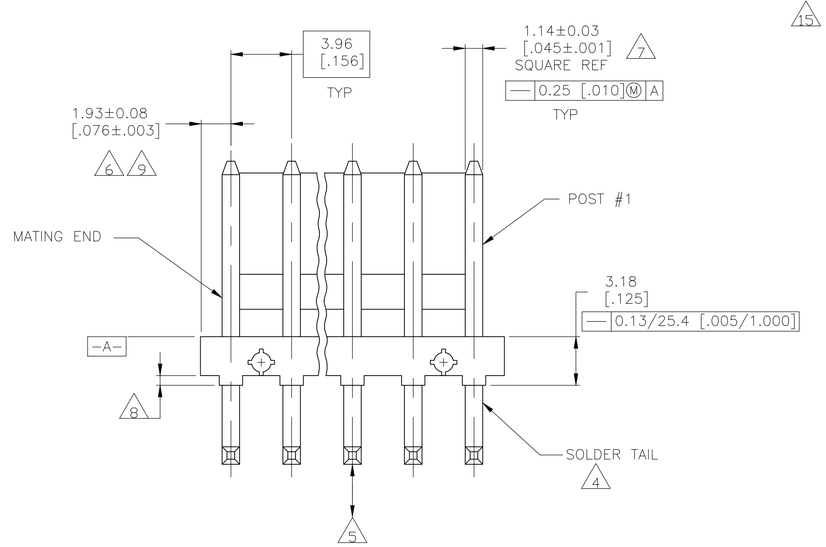

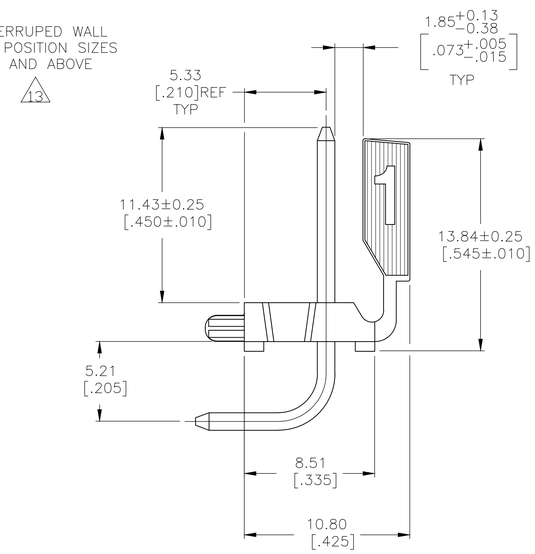

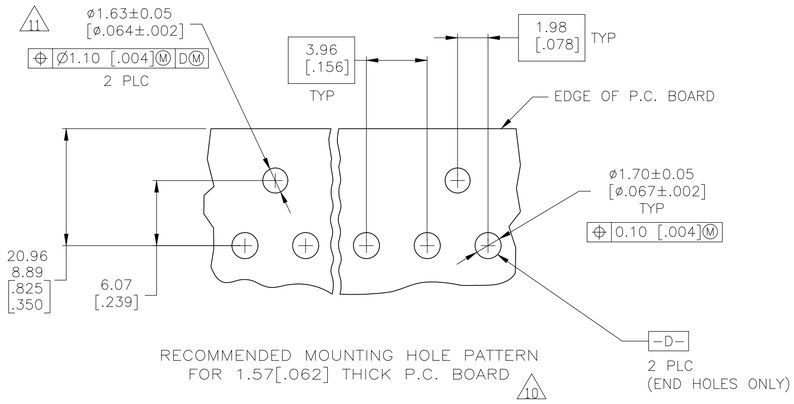

RECOMMENDED MOUNTING HOLE PATTERN
FOR 1.57[.062] THICK P.C. BOARD 10

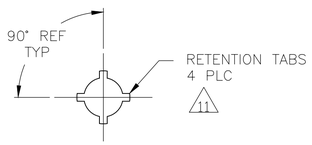

VIEW A-A
SCALE 10:1

1. MATERIAL
   HOUSING: THERMOPLASTIC POLYESTER,GLASS FILLED,UL94V-0.
   POST: COPPER ALLOY
2. FINISH
   HOUSING: NATURAL
   POST: BRIGHT TIN-LEAD (93/7) PLATE,0.00380-0.00880[.000150-.000350] THK OVER NICKEL UNDERPLATE,0.00130[.000050] MIN THK.
3. UL MARKING MAY NOT APPEAR ON THE 2 OR 3 POSITION SIZES. CSA MARKING MAY NOT APPEAR ON THE 2 POSITION SIZE.
4. POST SOLDERTAILS COMPLY WITH AMP SOLDERABILITY SPEC 109-11-2.
5. POST WITHSTANDS 13.34N [3 LB] MIN AXIAL FORCE IN EITHER DIRECTION WITHOUT DISLODGING.
6. APPLIES AT -A- .
7. APPLIES WHEN THE HEADER IS STRAIGHT.
8. PLASTIC PROJECTIONS PERMITTED IN THIS ZONE.
9. COORDINATE DIMENSIONS APPLIES FROM THE CENTER OF THE ACTUAL FEATURE.
10. SOLDER SIDE OF BOARD IS SHOWN.
11. THE RENTENTION TABS PROVIDE A ONE-TIME INTERFERENCE FIT IN THE 1.63[.064] DIAMETER BOARD HOLE FOR HEADER ASSEMBLY RETENTION DURING SOLDERING. FOUR TABS PER PEG,TWO PEGS PER HEADER ASSEMBLY (ONE PEG ONLY FOR 2 POSITION SIZE).
12. DIMENSIONS IN BRACKETS ARE IN INCHES.
13. ALL POSITION SIZES HAVE THE BACKWALL NOTCHED ON BOTH ENDS AS SHOWN. THE 2 THRU 5 POSITION SIZES HAVE SOLID BACKWALLS. POSITION SIZES 6 AND ABOVE HAVE AN INTERRUPTED BACKWALL AT VARIOUS LOCATIONS (SEE TABLE FOR INTERRUPTION(S) LOCATIONS).
14. EDGE OF POLARIZING LOCK WALL TO BE IN LINE WITH CENTERLINE OF ADJACENT POST WITHIN ±0.13 [.005]
15. NOTCH SHOWN MAY OR MAY NOT APPEAR.
16. FINISH
    HOUSING: NATURAL
    POST: MATTE TIN PLATE, .000150" MIN THICK OVER NICKEL.
17. OBSOLETE PART NUMBER

	FINISH	BACKWALL INTERRUPTION(S) BETWEEN POST	L	NO. OF POSITIONS	PART NO.
	16	4&5, 7&8, 11&12, 14&15	71.20 [2.803]	18	4-644617-8
17		4&5, 7&8, 10&11, 13&14	67.23 [2.647]	17	~~4-644617-7~~
17		4&5, 8&9, 12&13	63.27 [2.491]	16	~~4-644617-6~~
17		4&5, 8&9, 11&12	59.31 [2.335]	15	~~4-644617-5~~
		4&5 7&8, 10&11	55.35 [2.179]	14	4-644617-4
17		4&5 7&8, 10&11	51.38 [2.023]	13	~~4-644617-3~~
		4&5, 8&9	47.42 [1.867]	12	4-644617-2
		4&5, 7&8	43.46 [1.711]	11	4-644617-1
		3&4, 7&8	39.50 [1.555]	10	4-644617-0
		3&4, 6&7	35.53 [1.399]	9	3-644617-9
		4&5	31.57 [1.243]	8	3-644617-8
		4&5	27.61 [1.087]	7	3-644617-7
		3&4	23.65 [.931]	6	3-644617-6
		NONE	19.69 [.775]	5	3-644617-5
		NONE	15.72 [.619]	4	3-644617-4
		NONE	11.76 [.463]	3	3-644617-3
	16	NONE	7.80 [.307]	2	3-644617-2
17	2	4&5, 7&8, 11&12, 14&15	71.20 [2.803]	18	1-644617-8
17		4&5, 7&8, 10&11, 13&14	67.23 [2.647]	17	1-644617-7
17		4&5, 8&9, 12&13	63.27 [2.491]	16	1-644617-6
17		4&5, 8&9, 11&12	59.31 [2.335]	15	1-644617-5
17		4&5 7&8, 10&11	55.35 [2.179]	14	1-644617-4
17		4&5 7&8, 10&11	51.38 [2.023]	13	1-644617-3
17		4&5, 8&9	47.42 [1.867]	12	1-644617-2
17		4&5, 7&8	43.46 [1.711]	11	1-644617-1
17		3&4, 7&8	39.50 [1.555]	10	1-644617-0
17		3&4, 6&7	35.53 [1.399]	9	644617-9
17		4&5	31.57 [1.243]	8	644617-8
17		4&5	27.61 [1.087]	7	644617-7
17		3&4	23.65 [.931]	6	644617-6
17		NONE	19.69 [.775]	5	644617-5
17		NONE	15.72 [.619]	4	644617-4
17		NONE	11.76 [.463]	3	644617-3
17	2	NONE	7.80 [.307]	2	644617-2

THIS DRAWING IS A CONTROLLED DOCUMENT.

DIMENSIONS: mm [INCHES]

TOLERANCES UNLESS OTHERWISE SPECIFIED:
0 PLC ± -
1 PLC ± -
2 PLC ± -
3 PLC ± -
4 PLC ± -
ANGLES ± -

MATERIAL 1 FINISH 2 16

DWN B. LEWIS 26 OCT 93
CHK R. SWING 26 OCT 93
APVD D. CLARK 03 NOV 93
PRODUCT SPEC —
APPLICATION SPEC —
WEIGHT 0.000000

TE Connectivity

NAME MTA-156 HDR ASN,PLRZD LCK, RT ANGLE FRNT BND,.045 SQ PST, SN-PB PLTD,W/ RTTN PGS

SIZE A1 | CAGE CODE 00779 | DRAWING NO C-644617 | RESTRICTED TO —

CUSTOMER DRAWING | SCALE 5:1 | SHEET 1 OF 1 | REV K1

4805 (1/15)

X-ON Electronics

Largest Supplier of Electrical and Electronic Components

Click to view similar products for Headers & Wire Housings ***category:***

Click to view products by TE Connectivity ***manufacturer:***

Other Similar products are found below :

892-18-020-10-001101 58102-G61-06LF 582553-1 0009485154 009176003701906 0050291907 LY20-4P-DT1-P1E-BR 02.125.8002.8 609-3404 61062-3 61082-181009 622-3653LF 63453-116 636-1030 636-1427 636-3427 636-4007 641938-9 641991-4 644827-2 65817-010LF 65817-015LF 65863-015LF 66207-023LF 67095-007LF 67601157 68645-018 68648-049 70.362.1628.0 70-4210 70-4226B 70-4853B 707-5020 707-5028 71.350.2428.0 71918-208LF 71961-016LF 733-134 733-162 754199-000 760-3052 787-8014-00 79531-3000 FCN-360C032-B FCN-367T-T012/H FCN-723D010/2 80.063.4001.1 800-90-001-10-001000 800-90-010-10-002000 801-43-002-10-013000