DRAWING MADE IN KOREAN PROJECTION

DIMENSIONS IN INCHS . MM

CUSTOMER DRAWING

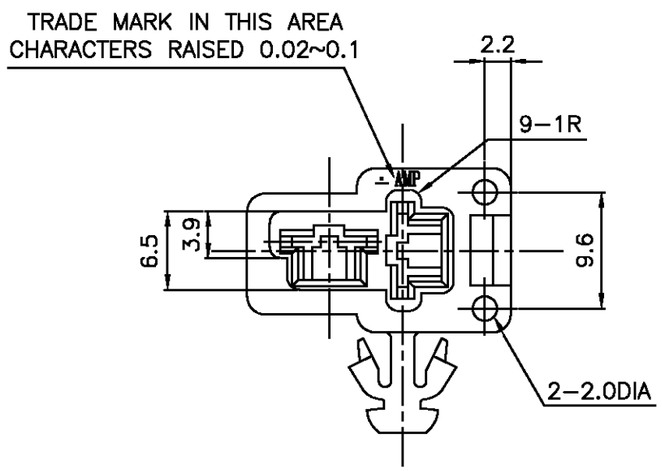

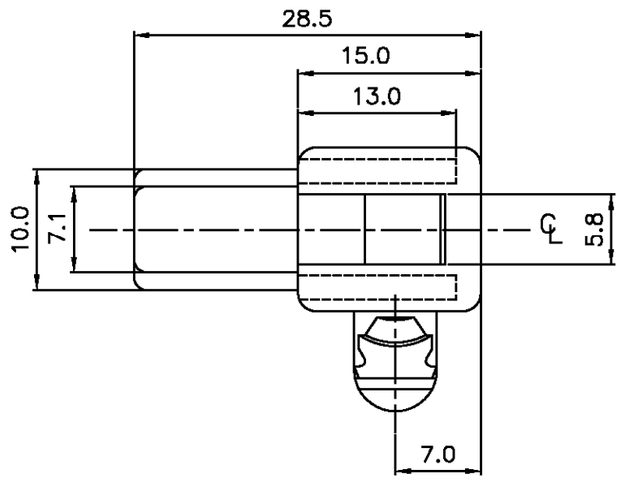

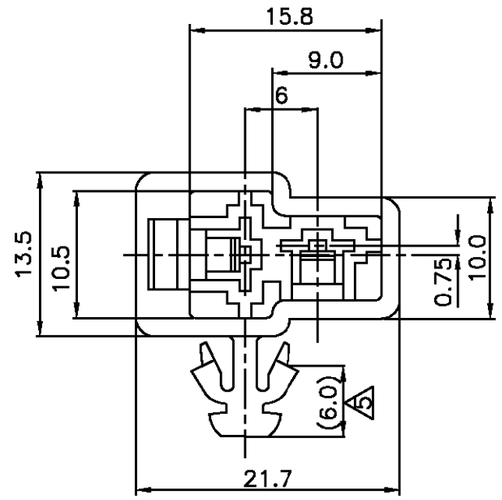

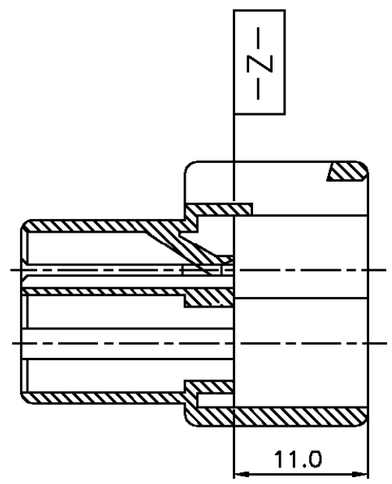

NOTE

1. TO BE MEASURED BETWEEN [– Z –] AND 2mm.
2. TO BE MATE WITH REC HSG SMOOTHLY.
3. TO BE MATE WITH PLATE(176994) SMOOTHLY
4. (A) APPLICABLE PANEL : DIAMETER – ø7.0 mm
   THICKNESS – 0.65~1.2 mm
5. (A) A SPACE REQUIRED INSIDE OF THE PANEL FOR PROPER INSTALLATION.
6. APPLIED CONTACT P/N : 170340,170341,170349
7. APPLIED REC HSG P/N : 172130

NATURAL	368021-1
COLOR	PART NO.

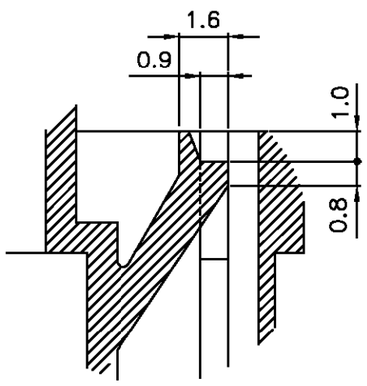

DETAIL LANCE
SCALE:5/1

APPLICABLE TAB CONTACT			
WIRE RANGE		TML P/N	CURRENT (A)
AWG	mm²		
20–14	0.5–2.27	170340	10
14–12	2–3.37	170341	20
22–20	0.3–0.5	170349	5

LTR	REVISION RECORD	DR	CHK	DATE
A	REVISED(RD97–0157)	YJ	JK	JUL.29 '97
0	RELEASED	YM	JK	11/10 '95

© 19 AMP KOREA
ALL RIGHT RESERVED AMP PRODUCTS COVERED BY PATENTS AND OR PATENTS PENDING

AMP KOREA

WIRE RANGE	INSULATION DIA	NAME	
MATERIAL: NYLON 66	FINISH/COLOR: SEE TABLE	250 2P CAP CLIP HSG. (PANEL MOUNT TYPE)	
DR	APP	TOLERANCES: 0<XX<10 ±0.2; 10<XX<30 ±0.25; 30<XX<100±0.3; ANGLES ±3°	SIZE A3 / LOC DS / NUMBER 368021
CHK	REL		SCALE 2/1 / REV A / SHEET 1/1

PRINT DIST.

X-ON Electronics

Largest Supplier of Electrical and Electronic Components

Click to view similar products for Headers & Wire Housings ***category:***

Click to view products by TE Connectivity ***manufacturer:***

Other Similar products are found below :

892-18-020-10-001101 58102-G61-06LF 582553-1 0009485154 009176003701906 0050291907 LY20-4P-DT1-P1E-BR 02.125.8002.8 609-3404 61062-3 61082-181009 622-3653LF 63453-116 636-1030 636-1427 636-3427 636-4007 641938-9 641991-4 644827-2 65817-010LF 65817-015LF 65863-015LF 66207-023LF 67095-007LF 67601157 68645-018 68648-049 70.362.1628.0 70-4210 70-4226B 70-4853B 707-5020 707-5028 71.350.2428.0 71918-208LF 71961-016LF 733-134 733-162 754199-000 760-3052 787-8014-00 79531-3000 FCN-360C032-B FCN-367T-T012/H FCN-723D010/2 80.063.4001.1 800-90-001-10-001000 800-90-010-10-002000 801-43-002-10-013000