THIS DRAWING IS UNPUBLISHED. RELEASED FOR PUBLICATION -,- .
© COPYRIGHT - BY TYCO ELECTRONICS CORPORATION. ALL INTERNATIONAL RIGHTS RESERVED.

LOC	DIST
GP	00

REVISIONS

P	LTR	DESCRIPTION	DATE	DWN	APVD
	K	REVISED PER ECO-08-004045	26MAR08	JDP	SLB

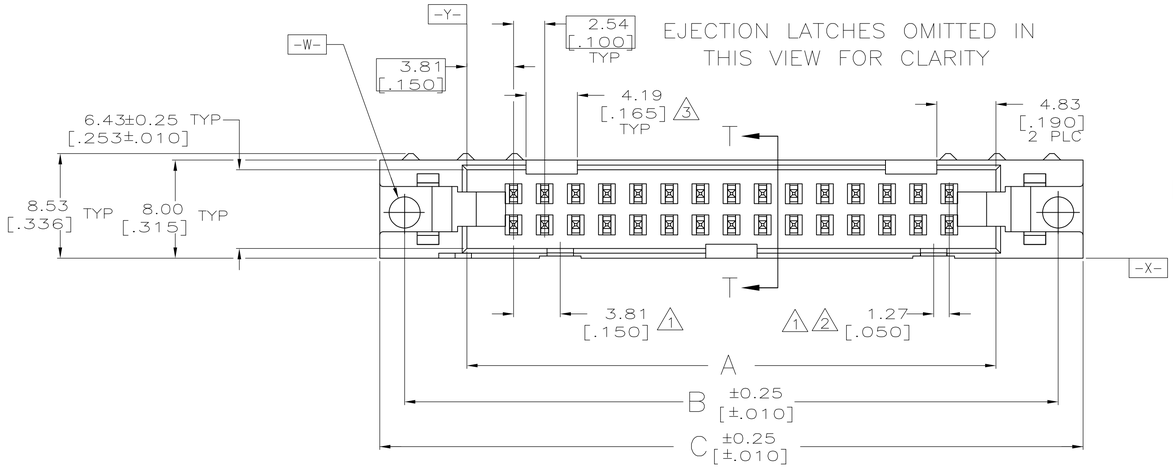

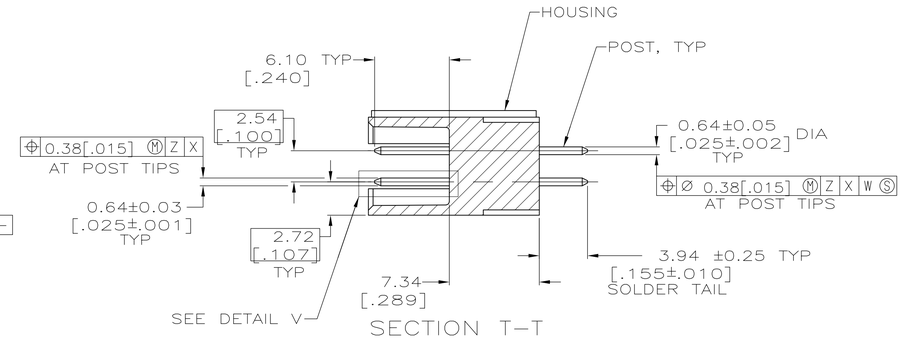

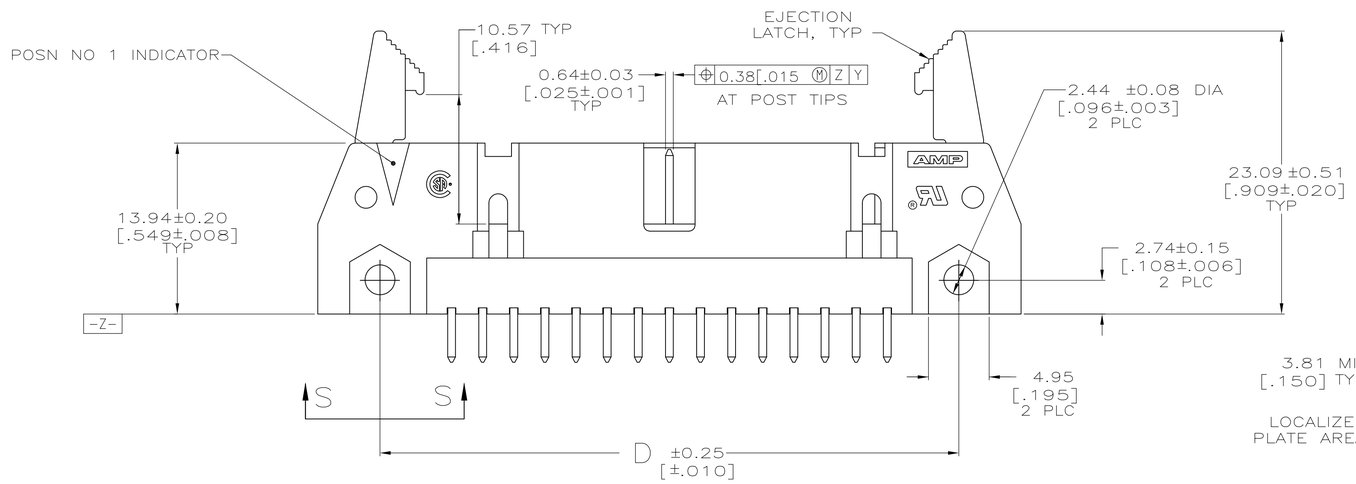

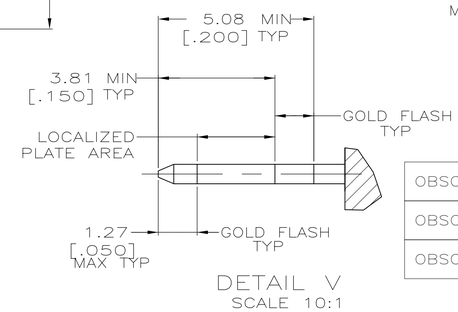

1. COORDINATE DIMENSION APPLIES FROM BASIC LOCATION.
2. 10 AND 14 POSITION SIZES CONTAIN ONLY ONE SLOT FOR SNAP-IN POLARIZER (MILITARY POLARIZATION) LOCATED AS SHOWN.
3. 10 POSITION SIZES CONTAIN ONLY ONE SLOT FOR DUAL POLARIZATION, LOCATED AS SHOWN.
4. RECOMMENDED PRINTED CIRCUIT BOARD THICKNESS IS 3.18 [.125].
5. DISTANCE REQUIRED BY EJECTION LATCHES IN THE OPEN POSITION.
6. POSTS: GOLD FLASH OVER PALLADIUM-NICKEL PLATE, 0.76μm[.000030] MIN TOTAL ON THE LOCALIZED PLATE AREA, 2.54μm[.000100] MIN TIN-LEAD PLATE ON THE SOLDER TAIL, 1.27μm[.000050] MIN NICKEL UNDERPLATE ON THE ENTIRE POST.
   -OR-
   0.76μm[.000030] MIN GOLD PLATE ON THE LOCALIZED PLATE AREA, 2.54μm[.000100] MIN TIN-LEAD PLATE ON THE SOLDER TAIL, 1.27μm[.000050] MIN NICKEL UNDERPLATE ON THE ENTIRE POST.

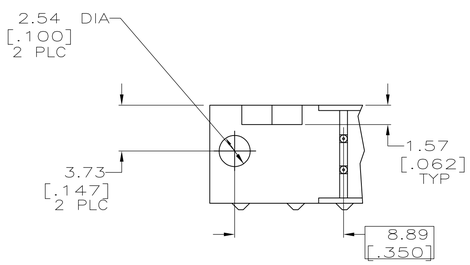

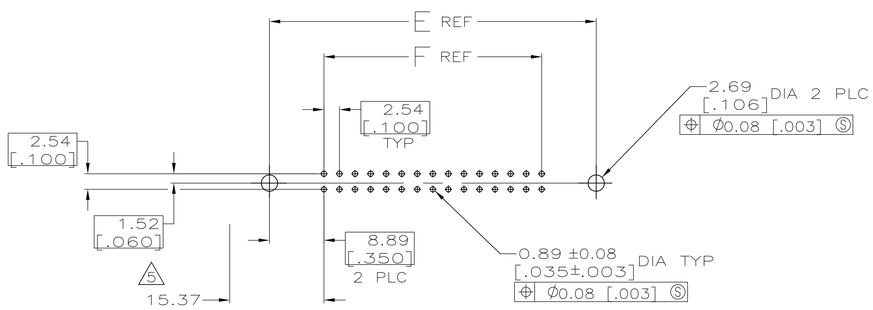

RECOMMENDED PC BOARD MOUNTING DIMENSIONS
SCALE 2:1

	F	E	D	C	B	A	NO OF POSN	PART NUMBER
OBSOLETE	53.34 [2.100]	71.12 [2.800]	65.02 [2.560]	75.18 [2.960]	71.12 [2.800]	60.96 [2.400]	44	1-499374-3
OBSOLETE	78.74 [3.100]	96.52 [3.800]	90.42 [3.560]	100.58 [3.960]	96.52 [3.800]	86.36 [3.400]	64	1-499374-2
OBSOLETE	73.66 [2.900]	91.44 [3.600]	85.34 [3.360]	95.50 [3.760]	91.44 [3.600]	81.28 [3.200]	60	1-499374-1
	60.96 [2.400]	78.74 [3.100]	72.64 [2.860]	82.80 [3.260]	78.74 [3.100]	68.58 [2.700]	50	1-499374-0
	48.26 [1.900]	66.04 [2.600]	59.94 [2.360]	70.10 [2.760]	66.04 [2.600]	55.88 [2.200]	40	499374-9
	40.64 [1.600]	58.42 [2.300]	52.32 [2.060]	62.48 [2.460]	58.42 [2.300]	48.26 [1.900]	34	499374-8
OBSOLETE	35.56 [1.400]	53.34 [2.100]	47.24 [1.860]	57.40 [2.260]	53.34 [2.100]	43.18 [1.700]	30	499374-7
	30.48 [1.200]	48.26 [1.900]	42.16 [1.660]	52.32 [2.060]	48.26 [1.900]	38.10 [1.500]	26	499374-6
	27.94 [1.100]	45.72 [1.800]	39.62 [1.560]	49.78 [1.960]	45.72 [1.800]	35.56 [1.400]	24	499374-5
	22.86 [.900]	40.64 [1.600]	34.54 [1.360]	44.70 [1.760]	40.64 [1.600]	30.48 [1.200]	20	499374-4
OBSOLETE	17.78 [.700]	35.56 [1.400]	29.46 [1.160]	39.62 [1.560]	35.56 [1.400]	25.40 [1.000]	16	499374-3
	15.24 [.600]	33.02 [1.300]	26.92 [1.060]	37.08 [1.460]	33.02 [1.300]	22.86 [.900]	14	499374-2
	10.16 [.400]	27.94 [1.100]	21.84 [.860]	32.00 [1.260]	27.94 [1.100]	17.78 [.700]	10	499374-1

THIS DRAWING IS A CONTROLLED DOCUMENT.

DIMENSIONS: mm [INCHES]

TOLERANCES UNLESS OTHERWISE SPECIFIED:
0 PLC ± -
1 PLC ± -
2 PLC ± 0.13[.005]
3 PLC ± -
4 PLC ± -
ANGLES ± -

MATERIAL: HOUSING & LATCHES: GLASS FILLED NYLON OR POLYESTER, 94V-0 RATED, BLACK
POSTS: PHOS BRONZE OR BRASS

FINISH: 6

DWN	H.MOLL	4-23-90
CHK	R.STONE	11-28-90
APVD	S. GOOD	11-29-90
PRODUCT SPEC	108-40018	
APPLICATION SPEC	—	
WEIGHT	—	

Tyco Electronics
Tyco Electronics Corporation
Harrisburg, PA 17105-3608

NAME: HEADER ASSY, UNIVERSAL, AMP-LATCH
—

SIZE	CAGE CODE	DRAWING NO	RESTRICTED TO
A1	00779	C-499374	—

CUSTOMER DRAWING | SCALE 4:1 | SHEET 1 OF 1 | REV K

4805 (1/08)

X-ON Electronics

Largest Supplier of Electrical and Electronic Components

Click to view similar products for Headers & Wire Housings ***category:***

Click to view products by TE Connectivity ***manufacturer:***

Other Similar products are found below :

892-18-020-10-001101 58102-G61-06LF 582553-1 0009485154 009176003701906 0050291907 LY20-4P-DT1-P1E-BR 02.125.8002.8 609-3404 61062-3 61082-181009 622-3653LF 63453-116 636-1030 636-1427 636-3427 636-4007 641938-9 641991-4 644827-2 65817-010LF 65817-015LF 65863-015LF 66207-023LF 67095-007LF 67601157 68645-018 68648-049 70.362.1628.0 70-4210 70-4226B 70-4853B 707-5020 707-5028 71.350.2428.0 71918-208LF 71961-016LF 733-134 733-162 754199-000 760-3052 787-8014-00 79531-3000 FCN-360C032-B FCN-367T-T012/H FCN-723D010/2 80.063.4001.1 800-90-001-10-001000 800-90-010-10-002000 801-43-002-10-013000