THIS DRAWING IS UNPUBLISHED. RELEASED FOR PUBLICATION ,19 .
© COPYRIGHT 19 BY AMP INCORPORATED. ALL RIGHTS RESERVED.

LOC	DIST
DY	-

REVISIONS

P	LTR	DESCRIPTION	DATE	DWN	APVD
	A	REVISED ECR-12-011098	07JAN2013	AZ	AC

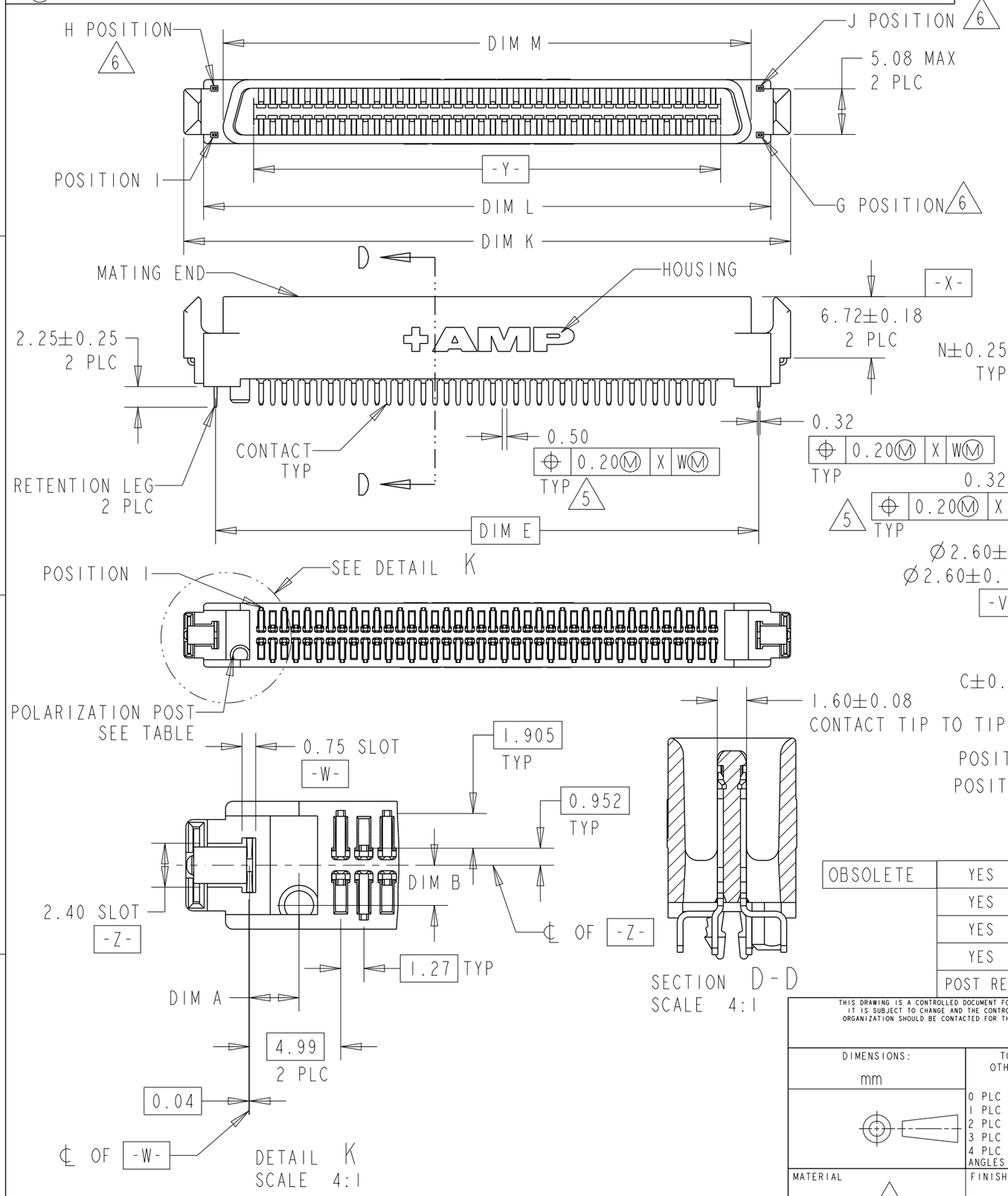

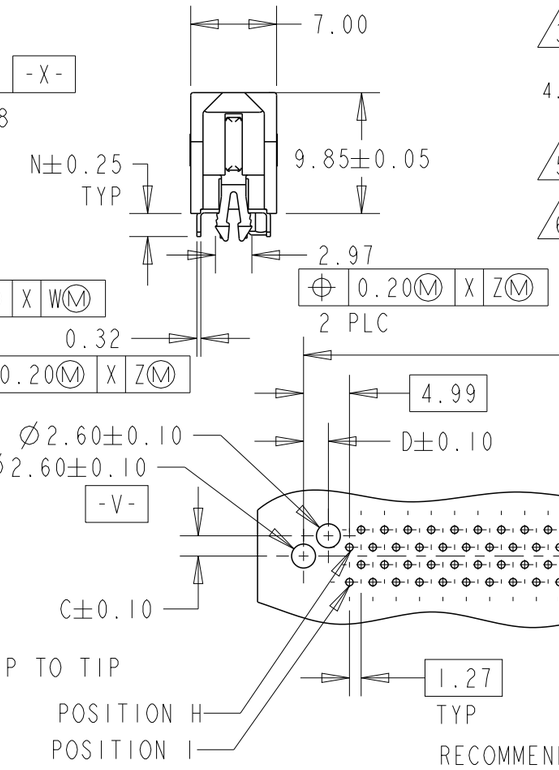

1. HOUSING: LCP, UL 94V-0 RATED, BLACK
   CONTACTS: PHOSPHOR BRONZE
   RETENTION LEGS: BRASS
2. 0.76um MIN GOLD FOR A LENGTH 2.00 STARTING 1.00 MAX FROM MATING END, 3.81um MIN TIN FOR A LENGTH OF 2.03 MIN FROM OPPOSITE END, BOTH OVER 1.27um MIN NICKEL
3. 2.54 um MIN TIN OVER 1.27um MIN NICKEL
4. CONNECTOR WILL ACCOMMODATE PRINTED CIRCUIT BOARD THICKNESS OF 1.00±0.13
5. POSITION TOLERANCE APPLIES AT CONTACT TIP ONLY
6. G, H AND J INDICATES NUMBER OF TERMINAL POSITIONS.

OBSOLETE	YES	3.18	32.47	36.75	41.10	40	21	20	34.11	2.70	2.20	2.20	2.70	40	5084488-6
	YES	3.18	57.87	62.15	66.50	80	41	40	59.51	2.70	2.20	2.20	2.70	80	5084488-5
	YES	1.78	32.47	36.75	41.10	40	21	20	34.11	2.70	2.20	2.20	2.70	40	5084488-3
	YES	1.78	57.87	62.15	66.50	80	41	40	59.51	2.70	2.20	2.20	2.70	80	5084488-1
	POST REF	N	M	L	K	J	H	G	E	D	C	B	A	POS.	PART NO.

THIS DRAWING IS A CONTROLLED DOCUMENT FOR AMP INCORPORATED. IT IS SUBJECT TO CHANGE AND THE CONTROLLING ENGINEERING ORGANIZATION SHOULD BE CONTACTED FOR THE LATEST REVISION.

DIMENSIONS: mm

TOLERANCES UNLESS OTHERWISE SPECIFIED:
0 PLC ±-
1 PLC ±-
2 PLC ±0.15
3 PLC ±-
4 PLC ±-
ANGLES ±1°

MATERIAL 1
FINISH 2 3

DWN WYLEE 19JAN05
CHK VINCENT TAN
APVD SF LEONG
PRODUCT SPEC 108-1548
APPLICATION SPEC 114-6061
WEIGHT -

tyco Electronics
Tyco Electronics Singapore Pte. Ltd.

NAME
PLUG ASSEMBLY, VERTICAL, CHAMP BLINDMATE .050 SERIES 1

SIZE	CAGE CODE	DRAWING NO
A3	00779	C-5084488

CUSTOMER DRAWING
SCALE 2:1 SHEET 1 OF 1 REV A

X-ON Electronics

Largest Supplier of Electrical and Electronic Components

Click to view similar products for Headers & Wire Housings ***category:***

Click to view products by TE Connectivity ***manufacturer:***

Other Similar products are found below :

892-18-020-10-001101 58102-G61-06LF 582553-1 0009485154 009176003701906 0050291907 LY20-4P-DT1-P1E-BR 02.125.8002.8 609-3404 61062-3 61082-181009 622-3653LF 63453-116 636-1030 636-1427 636-3427 636-4007 641938-9 641991-4 644827-2 65817-010LF 65817-015LF 65863-015LF 66207-023LF 67095-007LF 67601157 68645-018 68648-049 70.362.1628.0 70-4210 70-4226B 70-4853B 707-5020 707-5028 71.350.2428.0 71918-208LF 71961-016LF 733-134 733-162 754199-000 760-3052 787-8014-00 79531-3000 FCN-360C032-B FCN-367T-T012/H FCN-723D010/2 80.063.4001.1 800-90-001-10-001000 800-90-010-10-002000 801-43-002-10-013000