THIS DRAWING IS UNPUBLISHED. RELEASED FOR PUBLICATION – , – .
© COPYRIGHT – By – ALL RIGHTS RESERVED.

| LOC | DIST |
|---|---|
| AD | 00 |

REVISIONS

| P | LTR | DESCRIPTION | DATE | DWN | APVD |
|---|---|---|---|---|---|
| | N4 | REVISED PER ECO-12-008028 | 27APR12 | KH | MM |

1. THE NOTED DIMENSION APPLIES AT THE INTERSECTION OF THE POST AND HOUSING
2. POINT OF MEASUREMENT FOR PLATING THICKNESS.
3. POSTS: .000030 GOLD IN CONTACT AREA .000100–.000200 MATTE TIN LEAD ON SOLDER TAIL, ALL OVER .000050 NICKEL
4. POSTS: .000030 GOLD IN CONTACT AREA .000100–.000200 MATTE TIN ON SOLDER TAIL, ALL OVER .000050 NICKEL
5. OBSOLETE PARTS: OBSOLETE CIS STREAMLINING PER D.RENAUD/D.SINISI

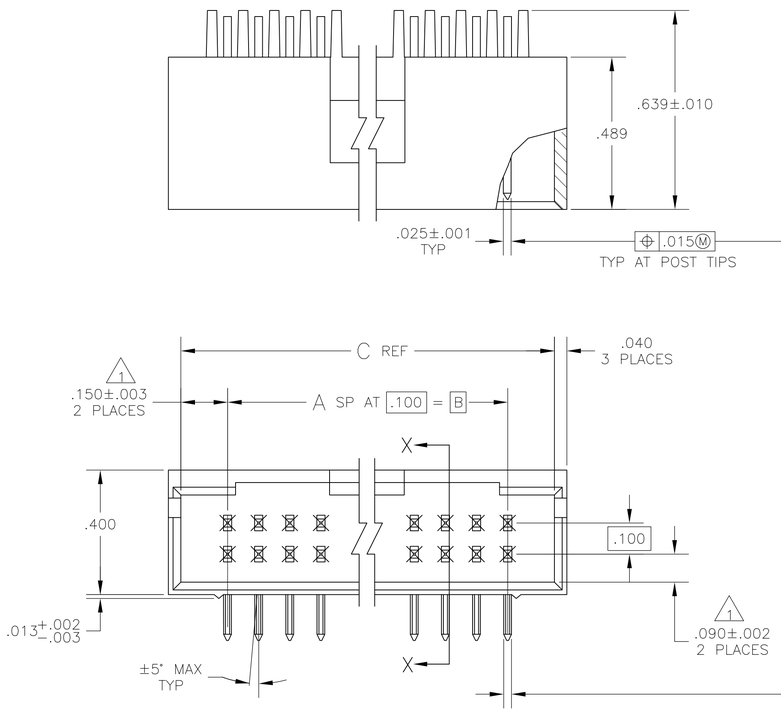


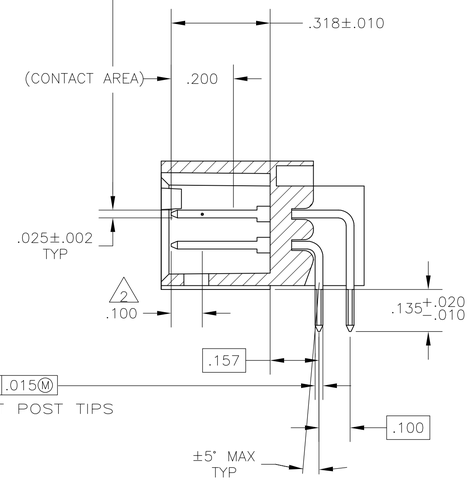


SECTION X–X

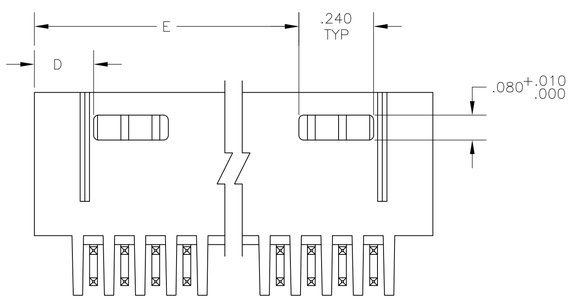


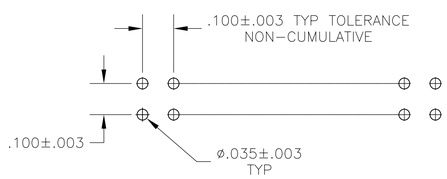


RECOMMENDED HOLE LAYOUT

| PLATING | E | D | C | B | A | NO OF POSN | ASSEMBLY PART NUMBER |
|---|---|---|---|---|---|---|---|
| 5 OBSOLETE | 4 | 3.490 | .190 | 3.800 | 3.500 | 35 | 72 | 8–103167–3 |
| 5 OBSOLETE | 4 | 3.390 | .190 | 3.700 | 3.400 | 34 | 70 | 8–103167–2 |
| | 4 | 3.290 | .190 | 3.600 | 3.300 | 33 | 68 | 8–103167–1 |
| 5 OBSOLETE | 4 | 3.190 | .190 | 3.500 | 3.200 | 32 | 66 | 8–103167–0 |
| 5 OBSOLETE | 4 | 3.090 | .190 | 3.400 | 3.100 | 31 | 64 | 7–103167–9 |
| 5 OBSOLETE | 4 | 2.990 | .190 | 3.300 | 3.000 | 30 | 62 | 7–103167–8 |
| | 4 | 2.890 | .190 | 3.200 | 2.900 | 29 | 60 | 7–103167–7 |
| 5 OBSOLETE | 4 | 2.790 | .190 | 3.100 | 2.800 | 28 | 58 | 7–103167–6 |
| 5 OBSOLETE | 4 | 2.690 | .190 | 3.000 | 2.700 | 27 | 56 | 7–103167–5 |
| 5 OBSOLETE | 4 | 2.590 | .190 | 2.900 | 2.600 | 26 | 54 | 7–103167–4 |
| 5 OBSOLETE | 4 | 2.490 | .190 | 2.800 | 2.500 | 25 | 52 | 7–103167–3 |
| 5 OBSOLETE | 4 | 2.390 | .190 | 2.700 | 2.400 | 24 | 50 | 7–103167–2 |
| 5 OBSOLETE | 4 | 2.290 | .190 | 2.600 | 2.300 | 23 | 48 | 7–103167–1 |
| 5 OBSOLETE | 4 | 2.190 | .190 | 2.500 | 2.200 | 22 | 46 | 7–103167–0 |
| 5 OBSOLETE | 4 | 2.090 | .190 | 2.400 | 2.100 | 21 | 44 | 6–103167–9 |
| 5 OBSOLETE | 4 | 1.990 | .190 | 2.300 | 2.000 | 20 | 42 | 6–103167–8 |
| | 4 | 1.890 | .190 | 2.200 | 1.900 | 19 | 40 | 6–103167–7 |
| 5 OBSOLETE | 4 | 1.790 | .190 | 2.100 | 1.800 | 18 | 38 | 6–103167–6 |
| 5 OBSOLETE | 4 | 1.690 | .190 | 2.000 | 1.700 | 17 | 36 | 6–103167–5 |
| | 4 | 1.590 | .190 | 1.900 | 1.600 | 16 | 34 | 6–103167–4 |
| 5 OBSOLETE | 4 | 1.490 | .190 | 1.800 | 1.500 | 15 | 32 | 6–103167–3 |
| | 4 | 1.390 | .190 | 1.700 | 1.400 | 14 | 30 | 6–103167–2 |
| 5 OBSOLETE | 4 | 1.290 | .190 | 1.600 | 1.300 | 13 | 28 | 6–103167–1 |
| | 4 | 1.190 | .190 | 1.500 | 1.200 | 12 | 26 | 6–103167–0 |
| | 4 | 1.090 | .190 | 1.400 | 1.100 | 11 | 24 | 5–103167–9 |
| | 4 | .990 | .190 | 1.300 | 1.000 | 10 | 22 | 5–103167–8 |
| | 4 | .890 | .190 | 1.200 | .900 | 9 | 20 | 5–103167–7 |
| | 4 | — | .490 | 1.100 | .800 | 8 | 18 | 5–103167–6 |
| | 4 | — | .390 | 1.000 | .700 | 7 | 16 | 5–103167–5 |
| | 4 | — | .390 | .900 | .600 | 6 | 14 | 5–103167–4 |
| | 4 | — | .290 | .800 | .500 | 5 | 12 | 5–103167–3 |
| | 4 | — | .290 | .700 | .400 | 4 | 10 | 5–103167–2 |
| 5 OBSOLETE | 4 | — | .190 | .600 | .300 | 3 | 8 | 5–103167–1 |
| 5 OBSOLETE | 3 | 3.490 | .190 | 3.800 | 3.500 | 35 | 72 | 3–103167–3 |
| 5 OBSOLETE | 3 | 3.390 | .190 | 3.700 | 3.400 | 34 | 70 | 3–103167–2 |
| | 3 | 3.290 | .190 | 3.600 | 3.300 | 33 | 68 | 3–103167–1 |
| 5 OBSOLETE | 3 | 3.190 | .190 | 3.500 | 3.200 | 32 | 66 | 3–103167–0 |
| 5 OBSOLETE | 3 | 3.090 | .190 | 3.400 | 3.100 | 31 | 64 | 2–103167–9 |
| 5 OBSOLETE | 3 | 2.990 | .190 | 3.300 | 3.000 | 30 | 62 | 2–103167–8 |
| | 3 | 2.890 | .190 | 3.200 | 2.900 | 29 | 60 | 2–103167–7 |
| 5 OBSOLETE | 3 | 2.790 | .190 | 3.100 | 2.800 | 28 | 58 | 2–103167–6 |
| 5 OBSOLETE | 3 | 2.690 | .190 | 3.000 | 2.700 | 27 | 56 | 2–103167–5 |
| 5 OBSOLETE | 3 | 2.590 | .190 | 2.900 | 2.600 | 26 | 54 | 2–103167–4 |
| 5 OBSOLETE | 3 | 2.490 | .190 | 2.800 | 2.500 | 25 | 52 | 2–103167–3 |
| | 3 | 2.390 | .190 | 2.700 | 2.400 | 24 | 50 | 2–103167–2 |
| 5 OBSOLETE | 3 | 2.290 | .190 | 2.600 | 2.300 | 23 | 48 | 2–103167–1 |
| 5 OBSOLETE | 3 | 2.190 | .190 | 2.500 | 2.200 | 22 | 46 | 2–103167–0 |
| 5 OBSOLETE | 3 | 2.090 | .190 | 2.400 | 2.100 | 21 | 44 | 1–103167–9 |
| 5 OBSOLETE | 3 | 1.990 | .190 | 2.300 | 2.000 | 20 | 42 | 1–103167–8 |
| | 3 | 1.890 | .190 | 2.200 | 1.900 | 19 | 40 | 1–103167–7 |
| 5 OBSOLETE | 3 | 1.790 | .190 | 2.100 | 1.800 | 18 | 38 | 1–103167–6 |
| 5 OBSOLETE | 3 | 1.690 | .190 | 2.000 | 1.700 | 17 | 36 | 1–103167–5 |
| | 3 | 1.590 | .190 | 1.900 | 1.600 | 16 | 34 | 1–103167–4 |
| | 3 | 1.490 | .190 | 1.800 | 1.500 | 15 | 32 | 1–103167–3 |
| | 3 | 1.390 | .190 | 1.700 | 1.400 | 14 | 30 | 1–103167–2 |
| 5 OBSOLETE | 3 | 1.290 | .190 | 1.600 | 1.300 | 13 | 28 | 1–103167–1 |
| | 3 | 1.190 | .190 | 1.500 | 1.200 | 12 | 26 | 1–103167–0 |
| | 3 | 1.090 | .190 | 1.400 | 1.100 | 11 | 24 | 103167–9 |
| | 3 | .990 | .190 | 1.300 | 1.000 | 10 | 22 | 103167–8 |
| | 3 | .890 | .190 | 1.200 | .900 | 9 | 20 | 103167–7 |
| 5 SUPERSEDED | 3 | — | .490 | 1.100 | .800 | 8 | 18 | 103167–6 |
| | 3 | — | .390 | 1.000 | .700 | 7 | 16 | 103167–5 |
| | 3 | — | .390 | .900 | .600 | 6 | 14 | 103167–4 |
| | 3 | — | .290 | .800 | .500 | 5 | 12 | 103167–3 |
| | 3 | — | .290 | .700 | .400 | 4 | 10 | 103167–2 |
| | 3 | — | .190 | .600 | .300 | 3 | 8 | 103167–1 |

THIS DRAWING IS A CONTROLLED DOCUMENT.

DIMENSIONS: INCHES

TOLERANCES UNLESS OTHERWISE SPECIFIED:
0 PLC ± –
1 PLC ± –
2 PLC ± –
3 PLC ± .005
4 PLC ± –
ANGLES ± –

MATERIAL: HOUSING: FLAME RETARDANT THERMOPLASTIC COLOR : BLACK
POST:PHOS BRONZE

FINISH: SEE TABLE

DWN H MOLL 27JUL87
CHK R FEIDT 28JUL87
APVD R FLICKER 29JUL87
PRODUCT SPEC —
APPLICATION SPEC —
WEIGHT —

TE Connectivity

NAME: HDR ASSY, MOD II, SHROUDED, 4 SIDES, DBL ROW, .100X.100 RIGHT ANGLE, W/ .025 SQ POSTS

| SIZE | CAGE CODE | DRAWING NO | RESTRICTED TO |
|---|---|---|---|
| A1 | 00779 | C-103167 | — |

CUSTOMER DRAWING | SCALE 4:1 | SHEET 1 OF 1 | REV N4

4805 (3/11)

# X-ON Electronics

Largest Supplier of Electrical and Electronic Components

***Click to view similar products for*** Headers & Wire Housings ***category:***

***Click to view products by*** TE Connectivity ***manufacturer:***

Other Similar products are found below :

892-18-020-10-001101 58102-G61-06LF 582553-1 0009485154 009176003701906 0050291907 LY20-4P-DT1-P1E-BR 02.125.8002.8 609-3404 61062-3 61082-181009 622-3653LF 63453-116 636-1030 636-1427 636-3427 636-4007 641938-9 641991-4 644827-2 65817-010LF 65817-015LF 65863-015LF 66207-023LF 67095-007LF 67601157 68645-018 68648-049 70.362.1628.0 70-4210 70-4226B 70-4853B 707-5020 707-5028 71.350.2428.0 71918-208LF 71961-016LF 733-134 733-162 754199-000 760-3052 787-8014-00 79531-3000 FCN-360C032-B FCN-367T-T012/H FCN-723D010/2 80.063.4001.1 800-90-001-10-001000 800-90-010-10-002000 801-43-002-10-013000