THIS DRAWING IS UNPUBLISHED. RELEASED FOR PUBLICATION -,- .
© COPYRIGHT - By - ALL RIGHTS RESERVED.

LOC	DIST
AD	00

REVISIONS

P	LTR	DESCRIPTION	DATE	DWN	APVD
	M2	REVISED PER ECO-11-004917	11MAR11	RK	HMR

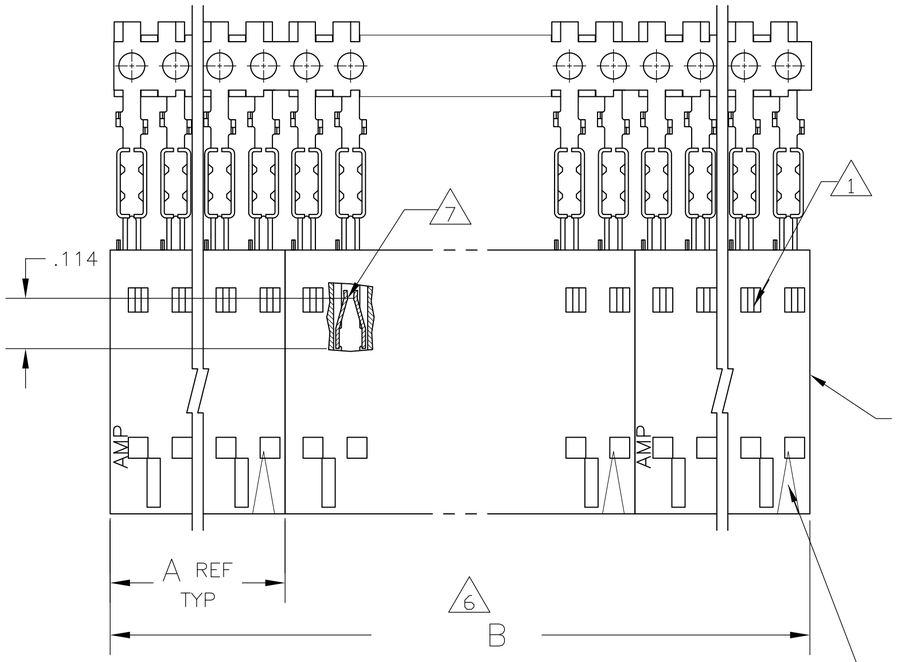

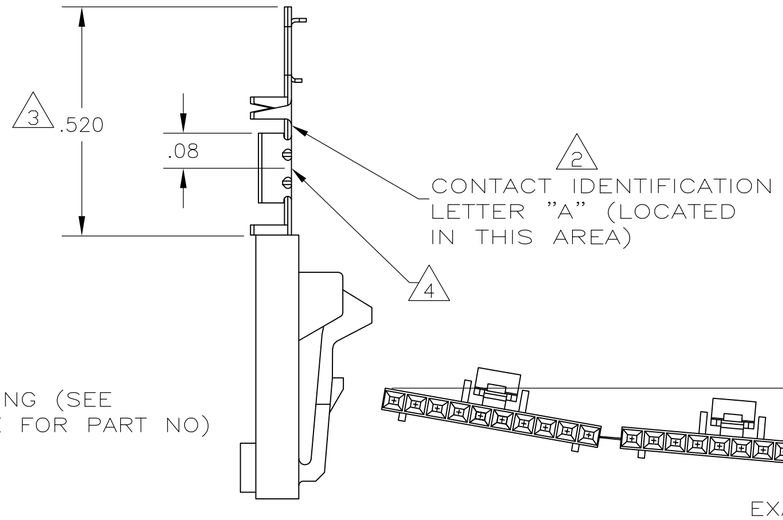

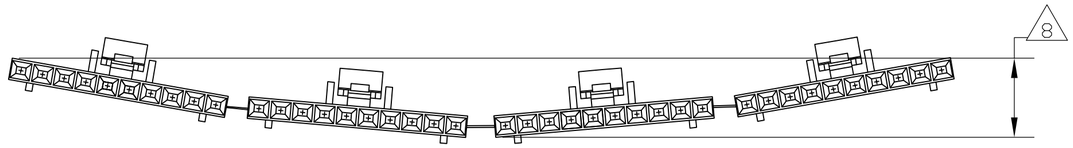

EXAMPLE: STRIP ASSEMBLY
SCALE 2:1

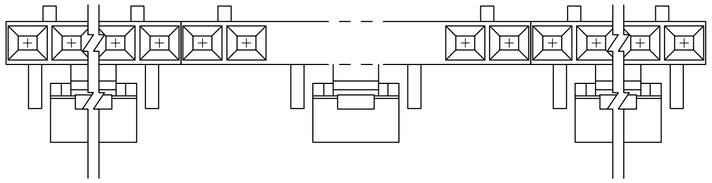

1. CONTACTS ARE LATCHED INTO THE PRELOAD WINDOWS
2. USE WITH #26-#30 AWG WIRE SIZE, .054/.030 INSULATION DIAMETER, .015 MAXIMUM INSULATION THICKNESS
3. THE DIMENSION APPLIES WITH THE FORWARD PRELOAD STOP IN CONTACT WITH THE HOUSING SURFACE
4. POINT OF MEASUREMENT FOR PLATING THICKNESS
5. FOR INDIVIDUAL ASSEMBLIES SEE PART NUMBER 103641
6. ASSEMBLIES ARE JOINED BY THE CARRIER STRIP. ORDER QUANTITY REFLECTS TOTAL NUMBER OF INDIVIDUAL ASSEMBLIES REQUIRED. SEE TABLE FOR NUMBER OF ASSEMBLIES PER STRIP.
7. POINT OF MEASUREMENT FOR PLATING THICKNESS (INSIDE BEAMS)
8. MAXIMUM ALLOWABLE BOW OF ASSEMBLY NOT TO EXCEED.055.
9. .000100-.000200 BRIGHT TIN-LEAD OVER .000050 NICKEL.
10. .000100-.000200 BRIGHT TIN OVER .000050 NICKEL.
11. PRELIMINARY PART - NOT RELEASED FOR PRODUCTION.
12. .000100-.000200 MATTE TIN OVER .000050 NICKEL.
13. OBSOLETE PARTS: OBSOLETE CIS STREAMLINING PER D.RENAUD/D.SINISI

		PLATING	6	B	A	HOUSING PART NUMBER	NO OF POSN	ASSEMBLY PART NUMBER ON STRIP
13		12	2	2.40	1.198	1-104257-1	12	6-103959-1
13		12	2	2.20	1.098	1-104257-0	11	6-103959-0
		12	2	2.00	.998	104257-9	10	5-103959-9
		12	2	1.80	.898	104257-8	9	5-103959-8
		12	2	1.60	.798	104257-7	8	5-103959-7
13		12	2	1.40	.698	104257-6	7	5-103959-6
		12	4	2.39	.598	104257-5	6	5-103959-5
		12	4	1.99	.498	104257-4	5	5-103959-4
		12	5	1.99	.398	104257-3	4	5-103959-3
		12	8	2.40	.298	104257-2	3	5-103959-2
		12	10	2.00	.198	104257-1	2	5-103959-1
		10	5	1.99	.398	104257-3	4	1-103959-3
	11	10	4	1.99	.498	104257-4	5	1-103959-2
13		9	2	2.40	1.198	1-104257-1	12	1-103959-1
13		9	2	2.20	1.098	1-104257-0	11	1-103959-0
		9	2	2.00	.998	104257-9	10	103959-9
13	SUPERSEDED	9	2	1.80	.898	104257-8	9	103959-8
		9	2	1.60	.798	104257-7	8	103959-7
13		9	2	1.40	.698	104257-6	7	103959-6
		9	4	2.39	.598	104257-5	6	103959-5
		9	4	1.99	.498	104257-4	5	103959-4
		9	5	1.99	.398	104257-3	4	103959-3
		9	8	2.40	.298	104257-2	3	103959-2
		9	10	2.00	.198	104257-1	2	103959-1

THIS DRAWING IS A CONTROLLED DOCUMENT.

DIMENSIONS: INCHES

TOLERANCES UNLESS OTHERWISE SPECIFIED:
0 PLC ± -
1 PLC ± -
2 PLC ± .02
3 PLC ± .005
4 PLC ± -
ANGLES ± -

MATERIAL: HOUSING:
FINISH: SEE TABLE

DWN L A MAYER 11-4-86
CHK P de Jong 11-12-86
APVD P de Jong 11-12-86
PRODUCT SPEC 108-25034
APPLICATION SPEC 114-25026
WEIGHT -

TE Connectivity

NAME: RCPT ASSY, AMPMODU MTE, SINGLE ROW .100 C/L, LATCHED AND POLARIZED FOR #26-#30 AWG WIRE SIZE, STRIP FORM

SIZE A2 | CAGE CODE 00779 | DRAWING NO C-103959 | RESTRICTED TO -

CUSTOMER DRAWING | SCALE 4:1 | SHEET 1 OF 1 | REV M2

103959

X-ON Electronics

Largest Supplier of Electrical and Electronic Components

Click to view similar products for Headers & Wire Housings ***category:***

Click to view products by TE Connectivity ***manufacturer:***

Other Similar products are found below :

892-18-020-10-001101 58102-G61-06LF 582553-1 0009485154 009176003701906 0050291907 LY20-4P-DT1-P1E-BR 02.125.8002.8 609-3404 61062-3 61082-181009 622-3653LF 63453-116 636-1030 636-1427 636-3427 636-4007 641938-9 641991-4 644827-2 65817-010LF 65817-015LF 65863-015LF 66207-023LF 67095-007LF 67601157 68645-018 68648-049 70.362.1628.0 70-4210 70-4226B 70-4853B 707-5020 707-5028 71.350.2428.0 71918-208LF 71961-016LF 733-134 733-162 754199-000 760-3052 787-8014-00 79531-3000 FCN-360C032-B FCN-367T-T012/H FCN-723D010/2 80.063.4001.1 800-90-001-10-001000 800-90-010-10-002000 801-43-002-10-013000