THIS DRAWING IS UNPUBLISHED. RELEASED FOR PUBLICATION - , - .
© COPYRIGHT - By - ALL RIGHTS RESERVED.

LOC	DIST
AD	00

REVISIONS

P	LTR	DESCRIPTION	DATE	DWN	APVD
	L3	REVISED PER ECO-11-004587	11MAR11	RK	HMR

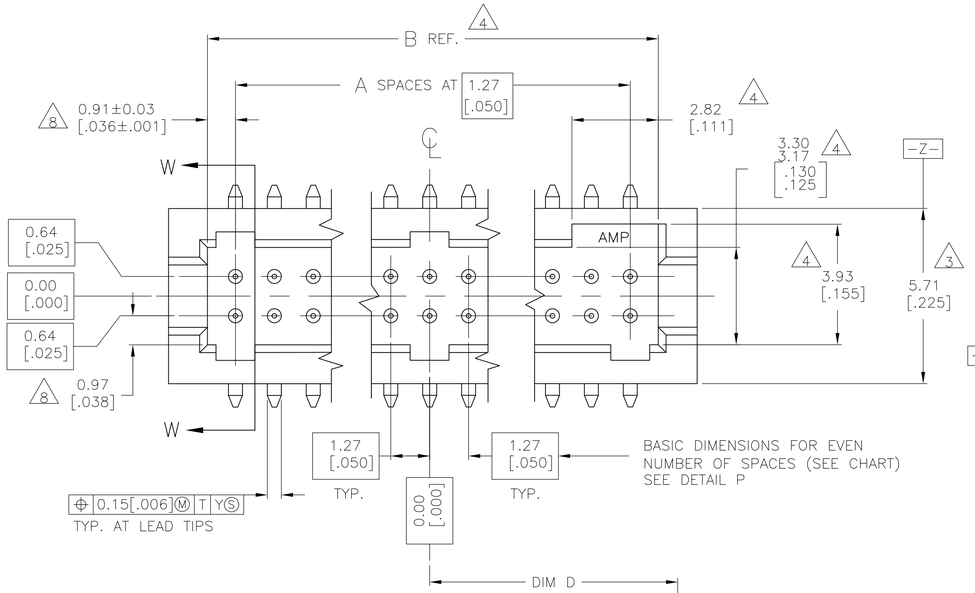

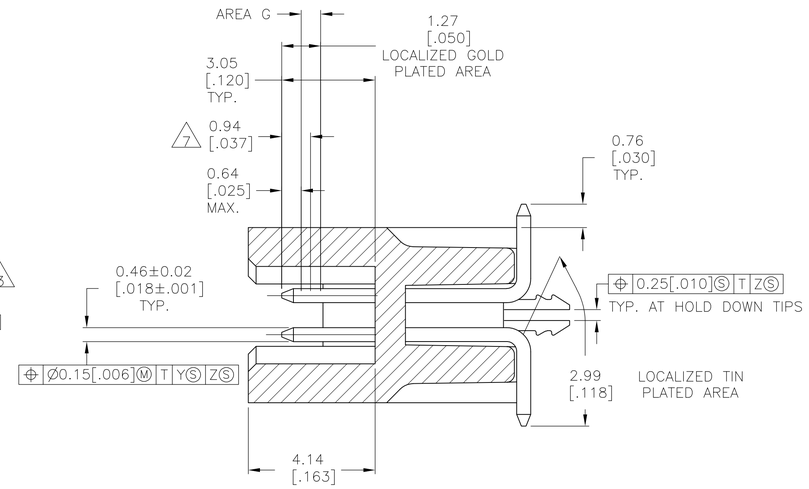

SECTION W-W

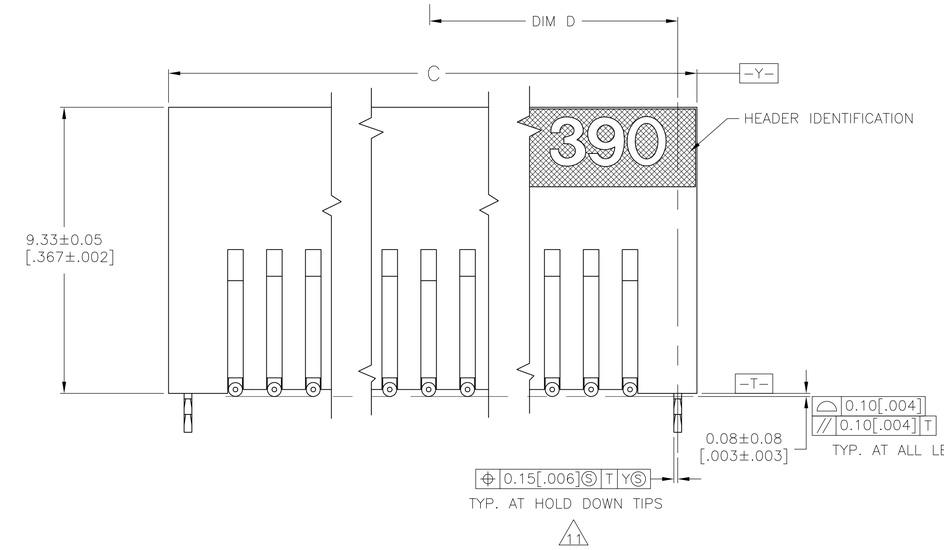

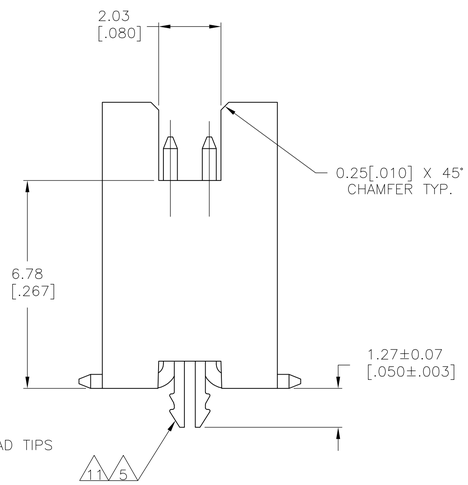

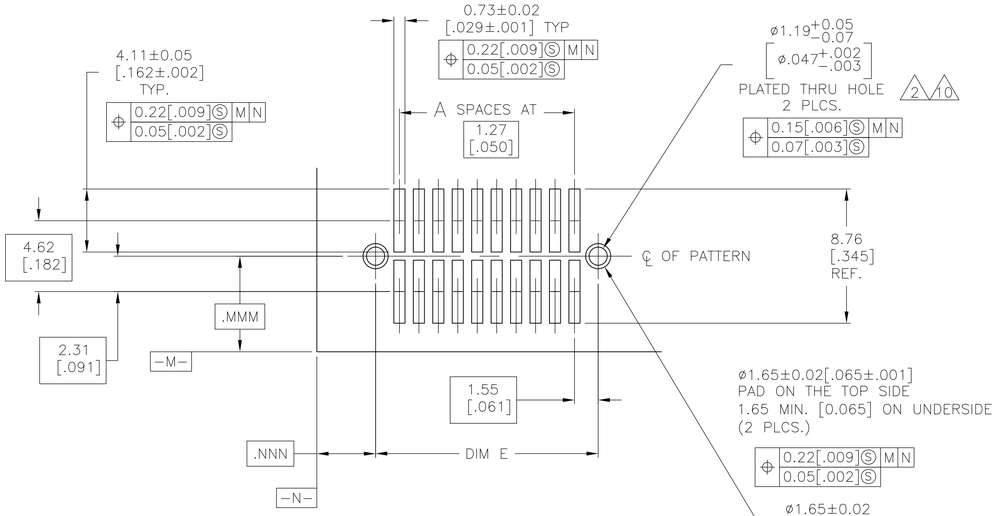

RECOMMENDED BOARD LAYOUT
SCALE 5:1

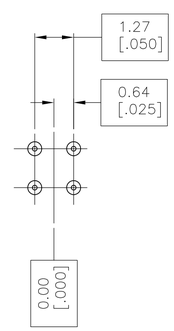

DETAIL P
BASIC DIMENSIONS FOR ODD NUMBER OF SPACES

1. 0.00076[.000030] GOLD AT POINT OF MEASUREMENT, 0.00051[.000020] MIN AT THE END POINTS OF AREA G, (LOCALIZED GOLD PLATE AREA), 0.0038[.000150] TIN-LEAD ON LOCALIZED TIN PLATED AREA, ALL OVER 0.0013[.000050] NICKEL
2. USE 1.32±0.02[.0520±.0010] DRILLED HOLE (#55 DRILL). FINISH TO BE TIN-LEAD OVER 0.02 [.001] MIN COPPER.
3. DIMENSION APPLIES AT BASE OF SHROUD.
4. THE NOTED DIMENSIONS APPLY AT THE MATING FACE OF THE HOUSING.
5. 0.0038 [.000150] TIN-LEAD ON HOLD DOWN,ALL OVER 0.0013 [.000050] NICKEL.
6. IF PLANNING TO USE MORE THAN ONE MATING PAIR OF CONNECTORS TO INTERCONNECT 2 BOARDS, PLEASE REFER TO SPACING PARAGRAPH IN APPLICATION SPEC, #114-7010
7. POINT OF MEASUREMENT
8. DIMENSIONS NOTED APPLY FROM THE BASIC DIMENSION LINE (NOT THE CIRCUIT CAVITY CENTER LINE) TO THE SURFACE INDICATED.
9. 0.00076 (.000030) GOLD AT POINT OF MEASUREMENT, 0.00051(.000020) MIN AT THE END POINTS OF AREA G (LOCALIZED GOLD PLATE AREA), 0.0038(.000150) TIN ON LOCALIZED TIN PLATED AREA, ALL OVER 0.0013(.000050) NICKEL.
10. USE 1.32±0.02(.0520±.0010) DRILLED HOLE (#55 DRILL) FINISH TO BE TIN OVER 0.02(.001) MIN COPPER.
11. 0.0038 (.000150) TIN ON HOLDDOWN, ALL OVER 0.0013 (.000050) NICKEL
12. ROHS 2002/95/EC COMPLIANT.
13. OBSOLETE PARTS: OBSOLETE CIS STREAMLINING PER D.RENAUD/D.SINISI

	12	9 11	65.33 [2.572]	32.66 [1.286]	66.59 [2.622]	64.05 [2.522]	49	100	6-104693-0
12 13	OBSOLETE	9 11	58.98 [2.322]	29.48 [1.161]	60.24 [2.372]	57.70 [2.272]	44	90	~~5-104693-9~~
	12	9 11	52.63 [2.072]	26.31 [1.036]	53.89 [2.122]	51.35 [2.022]	39	80	5-104693-8
	12	9 11	46.28 [1.822]	23.13 [.911]	47.54 [1.872]	45.00 [1.772]	34	70	5-104693-7
	12	9 11	39.93 [1.572]	19.96 [.786]	41.19 [1.622]	38.65 [1.522]	29	60	5-104693-6
	12	9 11	33.58 [1.322]	16.78 [.661]	34.84 [1.372]	32.30 [1.272]	24	50	5-104693-5
	12	9 11	27.23 [1.072]	13.61 [.536]	28.49 [1.122]	25.95 [1.022]	19	40	5-104693-4
	12	9 11	20.88 [.822]	10.43 [.411]	22.14 [.872]	19.60 [.772]	14	30	5-104693-3
	12	9 11	14.53 [.572]	7.26 [.286]	15.79 [.622]	13.25 [.522]	9	20	5-104693-2
	12	9 11	8.18 [.322]	4.08 [.161]	9.44 [.372]	6.90 [.272]	4	10	5-104693-1
		1 5	65.33 [2.572]	32.66 [1.286]	66.59 [2.622]	64.05 [2.522]	49	100	1-104693-0
13	OBSOLETE	1 5	58.98 [2.322]	29.48 [1.161]	60.24 [2.372]	57.70 [2.272]	44	90	~~104693-9~~
		1 5	52.63 [2.072]	26.31 [1.036]	53.89 [2.122]	51.35 [2.022]	39	80	104693-8
		1 5	46.28 [1.822]	23.13 [.911]	47.54 [1.872]	45.00 [1.772]	34	70	104693-7
		1 5	39.93 [1.572]	19.96 [.786]	41.19 [1.622]	38.65 [1.522]	29	60	104693-6
		1 5	33.58 [1.322]	16.78 [.661]	34.84 [1.372]	32.30 [1.272]	24	50	104693-5
		1 5	27.23 [1.072]	13.61 [.536]	28.49 [1.122]	25.95 [1.022]	19	40	104693-4
		1 5	20.88 [.822]	10.43 [.411]	22.14 [.872]	19.60 [.772]	14	30	104693-3
		1 5	14.53 [.572]	7.26 [.286]	15.79 [.622]	13.25 [.522]	9	20	104693-2
		1 5	8.18 [.322]	4.08 [.161]	9.44 [.372]	6.90 [.272]	4	10	104693-1
	FINISH	E	D	C	B	A	NUMBER OF POSITIONS	PART NUMBER

THIS DRAWING IS A CONTROLLED DOCUMENT.

DIMENSIONS: mm [INCHES]

TOLERANCES UNLESS OTHERWISE SPECIFIED:
0 PLC ± -
1 PLC ± -
2 PLC ± 0.13 [.005]
3 PLC ± -
4 PLC ± -
ANGLES ± -

MATERIAL
HOUSING :LCP
COLOUR :BLACK
POST :PHOS BRONZE
HOLD DOWN:COPPER ALLOY

FINISH
SEE TABLE

DWN KATE HELM 01AUG06
CHK D. GORENC 8/12/91
APVD D. GORENC 8/12/91

PRODUCT SPEC
108-1332
APPLICATION SPEC
114-7010
WEIGHT
-

TE Connectivity

NAME
HEADER ASSEMBLY, SURFACE MOUNT, AMPMODU 50/50 GRID (9.90 [.390] MATED HEIGHT)

SIZE A1 | CAGE CODE - | DRAWING NO C-104693 | RESTRICTED TO -

CUSTOMER DRAWING | SCALE 10:1 | SHEET 1 OF 1 | REV L3

4805 (3/11)

X-ON Electronics

Largest Supplier of Electrical and Electronic Components

Click to view similar products for Headers & Wire Housings ***category:***

Click to view products by TE Connectivity ***manufacturer:***

Other Similar products are found below :

892-18-020-10-001101 58102-G61-06LF 582553-1 0009485154 009176003701906 0050291907 LY20-4P-DT1-P1E-BR 02.125.8002.8 609-3404 61062-3 61082-181009 622-3653LF 63453-116 636-1030 636-1427 636-3427 636-4007 641938-9 641991-4 644827-2 65817-010LF 65817-015LF 65863-015LF 66207-023LF 67095-007LF 67601157 68645-018 68648-049 70.362.1628.0 70-4210 70-4226B 70-4853B 707-5020 707-5028 71.350.2428.0 71918-208LF 71961-016LF 733-134 733-162 754199-000 760-3052 787-8014-00 79531-3000 FCN-360C032-B FCN-367T-T012/H FCN-723D010/2 80.063.4001.1 800-90-001-10-001000 800-90-010-10-002000 801-43-002-10-013000