THIS DRAWING IS UNPUBLISHED. RELEASED FOR PUBLICATION - , - .
© COPYRIGHT - By - ALL RIGHTS RESERVED.

LOC	DIST
AD	00

REVISIONS

P	LTR	DESCRIPTION	DATE	DWN	APVD
	S4	REVISED PER ECO-11-004587	11MAR11	RK	HMR

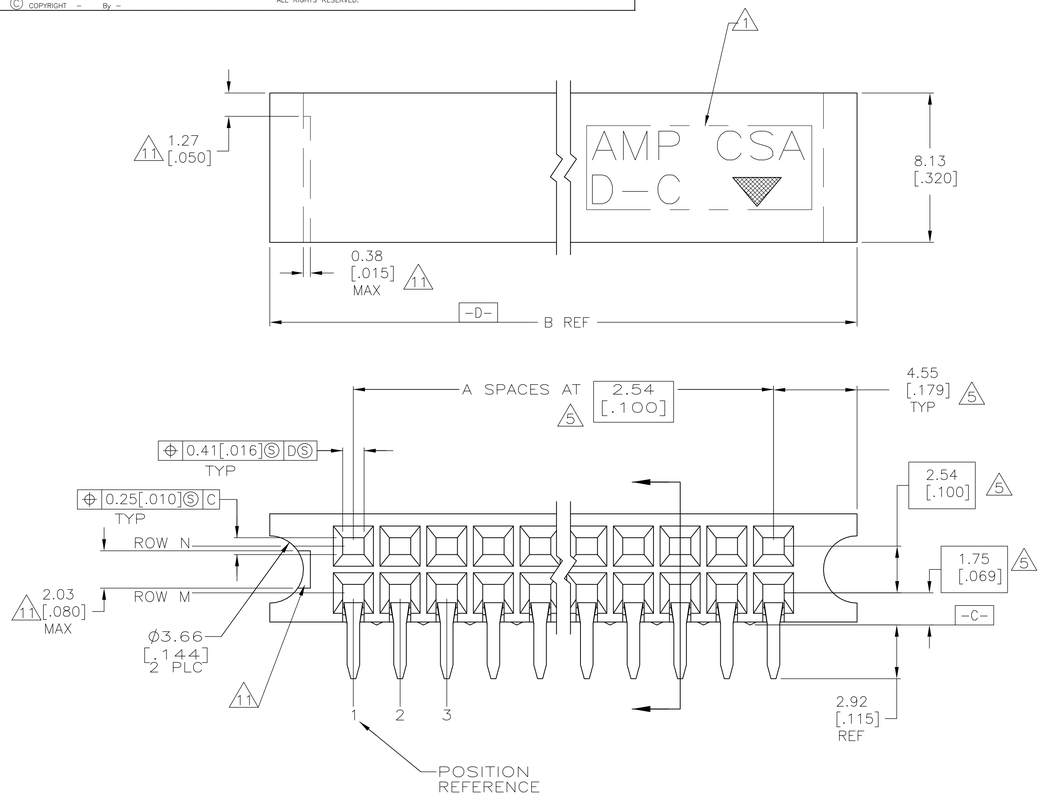

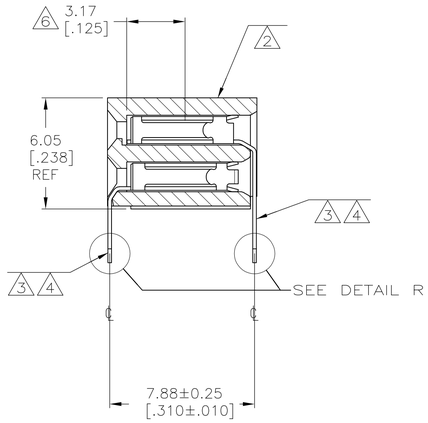

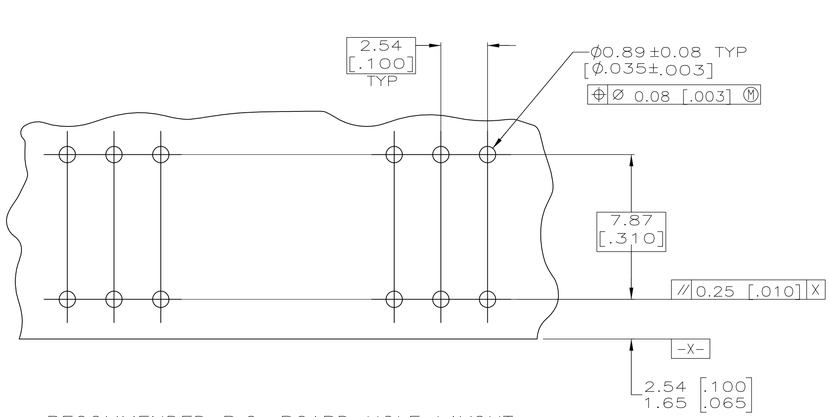

RECOMMENDED P.C. BOARD HOLE LAYOUT

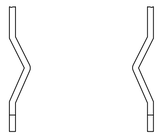

DETAIL R
BOARD RETENTION FEATURE
SCALE 10:1

12	OBSOLETE	9	1, 4	1, 4	16.71 [.658]	3	8	10 ~~7-534204-2~~
12	OBSOLETE		1,3	1,3	14.17 [.558]	2	6	10 ~~7-534204-1~~
12	OBSOLETE		1, 2, 50, 51,99,100	1, 2, 50, 51,99,100	260.55 [10.258]	99	200	10 ~~7-534204-0~~
12	OBSOLETE		1, 2, 40, 41, 79, 80	1, 2, 40, 41, 79, 80	209.75 [8.258]	79	160	10 ~~6-534204-9~~
12	OBSOLETE		1, 2, 35, 36, 69, 70	1, 2, 35, 36, 69, 70	184.35 [7.258]	69	140	10 ~~6-534204-8~~
12	OBSOLETE		1, 2, 32, 33, 64, 65	1, 2, 32, 33, 64, 65	171.65 [6.758]	64	130	10 ~~6-534204-7~~
			1, 2, 27, 28, 54, 55	1, 2, 27, 28, 54, 55	146.25 [5.758]	54	110	10 6-534204-6
12	OBSOLETE		1, 2, 47, 48	1, 2, 47, 48	128.47 [5.058]	47	96	10 ~~6-534204-5~~
			1, 2, 35, 36	1, 2, 35, 36	97.99 [3.858]	35	72	10 6-534204-4
			1, 2, 34, 35	1, 2, 34, 35	95.45 [3.758]	34	70	10 6-534204-3
			1, 2, 19, 20	1, 2, 19, 20	57.35 [2.258]	19	40	10 6-534204-2
			1, 2, 11, 12	1, 2, 11, 12	37.03 [1.458]	11	24	10 6-534204-1
12	OBSOLETE		1, 2, 7, 8	1, 2, 7, 8	26.87 [1.058]	7	16	10 ~~6-534204-0~~
			1, 2, 9, 10	1, 2, 9, 10	31.95 [1.258]	9	20	10 5-534204-9
			1, 2, 39, 40	1, 2, 39, 40	108.15 [4.258]	39	80	10 5-534204-8
12	OBSOLETE		1, 2, 30, 31, 59, 60	1, 2, 30, 31, 59, 60	158.95 [6.258]	59	120	10 ~~5-534204-7~~
12	OBSOLETE		1, 2, 25, 26, 49, 50	1, 2, 25, 26, 49, 50	133.55 [5.258]	49	100	10 ~~5-534204-6~~
			1, 2, 29, 30	1, 2, 29, 30	82.75 [3.258]	29	60	10 5-534204-5
			1, 2, 14, 15	1, 2, 14, 15	44.65 [1.758]	14	30	10 5-534204-4
			1, 2, 17, 18	1, 2, 17, 18	52.27 [2.058]	17	36	10 5-534204-3
			1, 2, 5, 6	1, 2, 5, 6	21.79 [.858]	5	12	10 5-534204-2
			1, 2, 24, 25	1, 2, 24, 25	70.05 [2.758]	24	50	10 5-534204-1
8		4	1, 4	1, 4	16.71 [.658]	3	8	2-534204-2
8			1,3	1,3	14.17 [.558]	2	6	2-534204-1
12	OBSOLETE		1, 2, 50, 51,99,100	1, 2, 50, 51,99,100	260.55 [10.258]	99	200	~~2-534204-0~~
	OBSOLETE		1, 2, 40, 41, 79, 80	1, 2, 40, 41, 79, 80	209.75 [8.258]	~~79~~	~~160~~	~~1-534204-9~~
	OBSOLETE		1, 2, 35, 36, 69, 70	1, 2, 35, 36, 69, 70	184.35 [7.258]	69	140	1-534204-8
12	OBSOLETE		1, 2, 32, 33, 64, 65	1, 2, 32, 33, 64, 65	171.65 [6.758]	64	130	~~1-534204-7~~
			1, 2, 27, 28, 54, 55	1, 2, 27, 28, 54, 55	146.25 [5.758]	54	110	1-534204-6
12	OBSOLETE		1, 2, 47, 48	1, 2, 47, 48	128.47 [5.058]	47	96	~~1-534204-5~~
			1, 2, 35, 36	1, 2, 35, 36	97.99 [3.858]	35	72	1-534204-4
			1, 2, 34, 35	1, 2, 34, 35	95.45 [3.758]	34	70	1-534204-3
			1, 2, 19, 20	1, 2, 19, 20	57.35 [2.258]	19	40	1-534204-2
			1, 2, 11, 12	1, 2, 11, 12	37.03 [1.458]	11	24	1-534204-1
			1, 2, 7, 8	1, 2, 7, 8	26.87 [1.058]	7	16	1-534204-0
			1, 2, 9, 10	1, 2, 9, 10	31.95 [1.258]	9	20	534204-9
			1, 2, 39, 40	1, 2, 39, 40	108.15 [4.258]	39	80	534204-8
12	OBSOLETE		1, 2, 30, 31, 59, 60	1, 2, 30, 31, 59, 60	158.95 [6.258]	59	120	~~534204-7~~
12	OBSOLETE		1, 2, 25, 26, 49, 50	1, 2, 25, 26, 49, 50	133.55 [5.258]	49	100	~~534204-6~~
			1, 2, 29, 30	1, 2, 29, 30	82.75 [3.258]	29	60	534204-5
			1, 2, 14, 15	1, 2, 14, 15	44.65 [1.758]	14	30	534204-4
			1, 2, 17, 18	1, 2, 17, 18	52.27 [2.058]	17	36	534204-3
			1, 2, 5, 6	1, 2, 5, 6	21.79 [.858]	5	12	534204-2
			1, 2, 24, 25	1, 2, 24, 25	70.05 [2.758]	24	50	534204-1
FINISH			ROW M	ROW N	B	A	NO OF POSN	PART NUMBER
			POSITION WITH BOARD RETENTION					

1. "AMP", "CSA", " ", AND "DATE CODE" WITH .062 ±015 HIGH CHARACTERS WHERE SIZE PERMITS.
2. HOUSING: 1-70 POSITION SIZES MAY BE PPS, GLASS-FILLED OR PCT, GLASS-FILLED, POSITION SIZES GREATER THAN 70 WILL BE PPS, GLASS-FILLED.
3. CONTACT: PHOSPHOR BRONZE.
4. CONTACT FINISH: DUPLEX PLATED 0.00076 [.000030] GOLD IN CONTACT AREA, 0.00127-0.00254 [.000050-.000100] BRIGHT TIN-LEAD ON SOLDER TAILS, ALL OVER 0.00127 [.000050] NICKEL.
5. THESE DIMENSIONS PERTAIN TO CAVITY ℄'S ONLY, NOT TO CONTACT LOCATIONS.
6. POINT OF MEASUREMENT FOR PLATING THICKNESS (INSIDE CONTACT BEAMS).
7. CSA LOGO INK STAMPED WHITE ON HOUSING.
8. PRELIMINARY PART - NOT RELEASED FOR PRODUCTION
9. CONTACT FINISH: DUPLEX PLATED 0.00076 [.000030] GOLD IN CONTACT AREA, 0.00127-0.00254 [.000050-.000100] MATTE TIN ON SOLDER TAILS, ALL OVER 0.00127 [.000050] NICKEL.
10. ROHS 2002/95/EC COMPLIANT.
11. RECESSED AREA AROUND MOLD GATE IS OPTIONAL. THIS FEATURE IS ALLOWABLE ON EITHER SIDE OF HOUSING OR MAY NOT BE PRESENT AT ALL.
12. OBSOLETE PARTS: OBSOLETE CIS STREAMLINING PER D.RENAUD/D.SINISI

THIS DRAWING IS A CONTROLLED DOCUMENT.

DIMENSIONS: mm [INCHES]

TOLERANCES UNLESS OTHERWISE SPECIFIED:
0 PLC ± -
1 PLC ± -
2 PLC ± 0.13 [.005]
3 PLC ± -
4 PLC ± -
ANGLES ± -

MATERIAL 2 3
FINISH SEE TABLE

DWN T. HOFFMAN 4/29/96
CHK A. GABANY 5/7/96
APVD -
PRODUCT SPEC -
APPLICATION SPEC -
WEIGHT -

TE Connectivity

NAME RECEPTACLE ASSY, MOD II, DBL ROW, 2.54 X 2.54 [.100 X .100] CL, GUIDE PIN EARS, CLOSED ENTRY,

SIZE	CAGE CODE	DRAWING NO	RESTRICTED TO
A1	00779	C-534204	-

CUSTOMER DRAWING SCALE 6:1 SHEET 1 OF 1 REV S4

4805 (3/11)

X-ON Electronics

Largest Supplier of Electrical and Electronic Components

Click to view similar products for Headers & Wire Housings ***category:***

Click to view products by TE Connectivity ***manufacturer:***

Other Similar products are found below :

892-18-020-10-001101 58102-G61-06LF 582553-1 0009485154 009176003701906 0050291907 LY20-4P-DT1-P1E-BR 02.125.8002.8 609-3404 61062-3 61082-181009 622-3653LF 63453-116 636-1030 636-1427 636-3427 636-4007 641938-9 641991-4 644827-2 65817-010LF 65817-015LF 65863-015LF 66207-023LF 67095-007LF 67601157 68645-018 68648-049 70.362.1628.0 70-4210 70-4226B 70-4853B 707-5020 707-5028 71.350.2428.0 71918-208LF 71961-016LF 733-134 733-162 754199-000 760-3052 787-8014-00 79531-3000 FCN-360C032-B FCN-367T-T012/H FCN-723D010/2 80.063.4001.1 800-90-001-10-001000 800-90-010-10-002000 801-43-002-10-013000