THIS DRAWING IS UNPUBLISHED. RELEASED FOR PUBLICATION 2011
© COPYRIGHT 2011 - ALL RIGHTS RESERVED.

LOC	DIST
A1	-

REVISIONS

P	LTR	DESCRIPTION	DATE	DWN	APVD
	C23	Definition of measurement point f. contact height	30APR2019	FRAN	BERG
	C24	See PCN E-19-011079	09DEC2019	MAH.	BERG
	C25	See PCN E-20-001102	28AUG2020	MAH.	BERG
	C26	See PCN E-20-016678 and PCN-21-110979	20AUG2021	FRAN	BERG

Normale Anwendung
USUAL APPLICATION

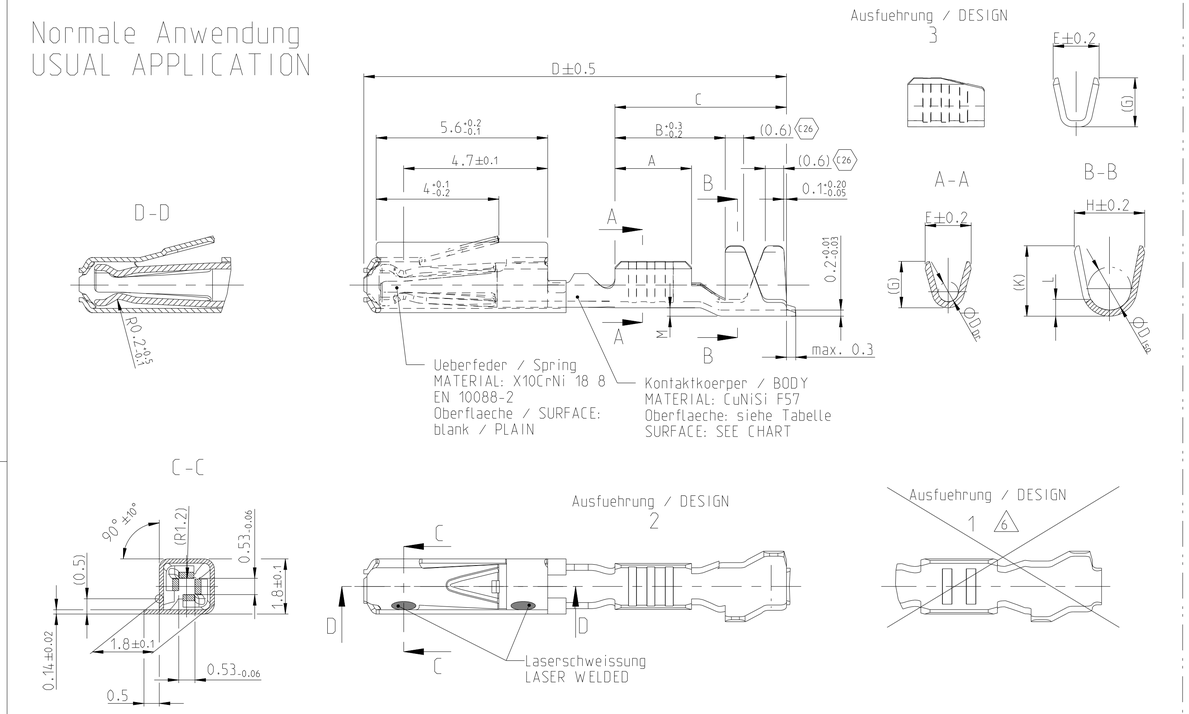

Einzeldichtungssystem
SINGLE WIRE SEAL SYSTEM

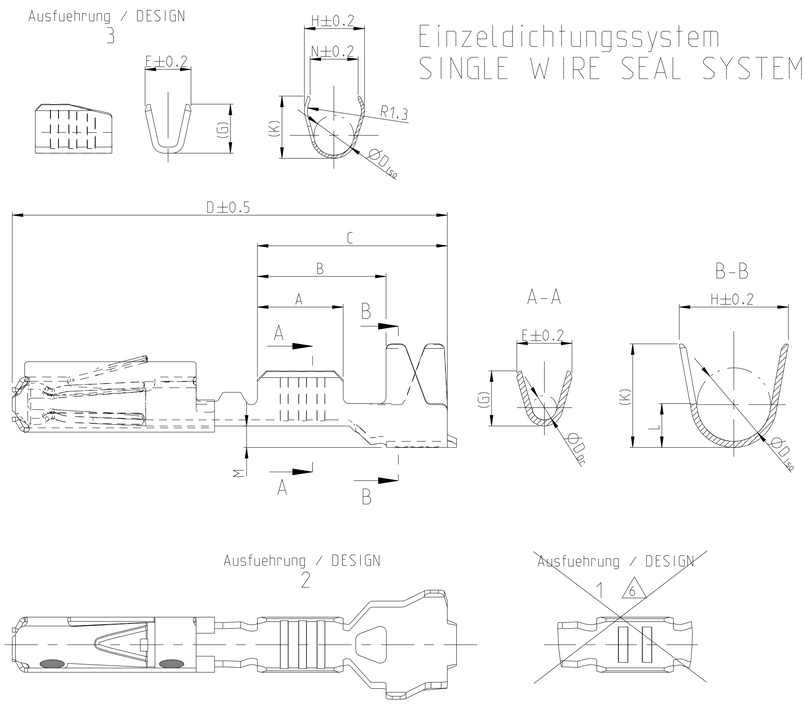

versilberte/vergoldete Ausfuehrung
SILVER/GOLD VERSION

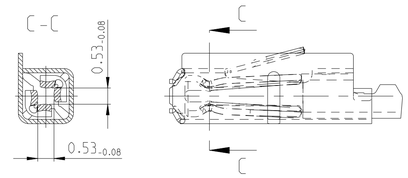

GEL VERSION

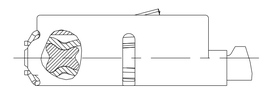

Oberflaeche / FINISH

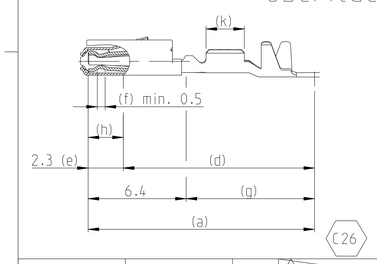

Sn: verzinnte Ausfuehrung
TINNED
(a) Kontaktkoerper: 0.8 - 2 µm Sn
BODY: 0.8 - 2 µm Sn

Ag: versilbert
SILVER
(e) min. 0.3 µm Ag
(f) min. 2.8 µm Ag INSIDE
min. 2.8 µm Ag innen
(g) min. 0.2 µm Sn
(k) min. 0.8 - 2 µm Sn

Au (galvanisch): galvanisch vergoldet
GOLD-ELECTROPLATED
(d) 0.05-1 µm Ni. beidseitig
0.05-1 µm Ni. ON BOTH SIDES
(e) 1-3 µm Ni. beidseitig
1-3 µm Ni. ON BOTH SIDES
(f) min. 1.8 µm Au ueber (e). innen
MIN. 1.8 µm Au OVER (e). INSIDE
(g) min. 0.2 µm Sn ueber (d). beidseitig
MIN. 0.2 µm Sn OVER (d). ON BOTH SIDES
(h) Au galvanisch auslaufend
Au OVERPLATING
(k) min. 0.8 - 2.0 µm Sn

Bestell-Nr. Ausfuehrung ORDER NO. DESIGN 2	Bestell-Nr. Ausfuehrung ORDER NO. DESIGN 3	Rev.	Bestell-Nr. Ausfuehrung ORDER NO. DESIGN 1 6	Rev.	VERSION	DGB Wire Size Range mm²	Oberflaeche SURFACE	Laenge LENGTH mm	Drahtcrimp WIRE CRIMP mm	Iso-crimp INSU-CRIMP mm	Gewicht WEIGHT g	Verarbeitung Spez. APPLICATION SPEC.	DGB Wire Size Range mm²	Isolations Ø INSULATIN DIA. mm	fuer Kammer Ø3.45 FOR CAVITY DIA. 3.45 mm	Blindstopfen RUBBER PLUG	fuer Kammer Ø4 FOR CAVITY DIA. 4 mm	Blindstopfen RUBBER PLUG
													zugehoerige Einzeldichtung / SUITABLE SINGLE WIRE SEAL					
6-965906-5		E	9 1-965906-5	D	Einzeldichtungssystem SINGLE WIRE SEAL SYSTEM	0.50-0.75	Au+Gel	A = 2.8 B = 4.2 C = 6.2 D = 14.3 M = 0.7	E = 2 G = 2.1 D_{Dr} = 1	H = 3.5 K = 3.4 L = 1.5 D_{Iso} = 2.4	0.13	114-18025	0.75	1.4-1.9	967067-1 gruen GREEN	967056-1 blau / BLUE	963142-1 schwarz BLACK	967056-1 blau / BLUE
5-965906-6		D	9 965906-6	C			Ag						0.5					
5-965906-5		E	9 965906-5	D			Au											
5-965906-1		D	9 965906-1	C			Sn											
5-962885-6		J	9 962885-6	H		0.25-0.35	Ag	A = 2.5 B = 3.9 C = 5.9 D = 14 M = 0.7	E = 1.8 G = 1.8 D_{Dr} = 0.8	H = 3.5 K = 3.4 L = 1.5 D_{Iso} = 2.4	0.13		0.35	0.9-1.4	967067-2 gelb YELLOW		963142-2 grau GREY	
5-962885-5		K	9 962885-5	J			Au						0.2					
5-962885-1		J	9 962885-1	H			Sn											
	2141826-6	A				0.13 / 0.17 7	Ag	A = 2.5 B = 4.3 C = 6.2 D = 14.2 M = 0.6 C26	E = 1.5 G = 1.4	H = 4 K = 3.9 N = 3.1 D_{Iso} = 2.6	0.1		0.13	0.85-1.25	967067-2 gelb YELLOW		963142-2 grau GREY	
	2141826-5	A					Au						0.17					
	2141826-1	A					Sn											
6-963715-5		K	9 1-963715-5	J	normale Anwendung USUAL APPLICATION	0.50-0.75	Au+Gel	A = 2.8 B = 3.8 C = 5.6 D = 13.7 M = 0.2	E = 2 G = 2.1 D_{Dr} = 1	H = 2.7 K = 2.9 L = 0.7 D_{Iso} = 1.6	0.11	114-18021						
5-963715-6		J	9 963715-6	H			Ag											
5-963715-5		K	9 963715-5	J			Au											
5-963715-1		J	9 963715-1	H			Sn											
6-928999-5		T	9 1-928999-5	S		0.25-0.35	Au+Gel	A = 2.5 B = 3.6 C = 5.6 D = 13.7 M = 0.2	E = 1.8 G = 1.8 D_{Dr} = 0.8	H = 2.3 K = 2.3 L = 0.6 D_{Iso} = 1.4	0.11							
5-928999-6		S	9 928999-6	R			Ag											
5-928999-5		T	9 928999-5	S			Au											
5-928999-1		S	9 928999-1	R			Sn											
	2141824-6	A				0.13 / 0.17 7	Ag	A = 2.5 B = 3.7 C = 5.4 D = 13.7 M = 0	E = 1.5 G = 1.4	H = 2 K = 1.9 D_{Iso} = 1.1	0.1							
	2141824-5	A					Au											
	2141824-1	A					Sn											
1355717-6		A				0.08-0.22	Ag		E = 1.5 G = 1.5 D_{Dr} = 0.65	H = 2 K = 2 D_{Iso} = 1.1	0.1							
1355717-5		C					Au											
1355717-1		C					Sn											

Bemerkungen

1 Datumscode (Woche/Jahr z.B. KW38/Jahr2009)
und TE-Revision (z.B. Rev.A)
DATE CODE (WEEK/YEAR E.G. WEEK NUMBER 38/YEAR2009)
AND TE REVISION (E.G. REV. A)

2 Passend zu Stiftkontakt siehe Zeichnung 929453
SUITABLE FOR PIN CONTACT SEE DRAWING 929453

3 Einzelheiten der Ausfuehrung bleiben dem Hersteller ueberlassen
DETAILS OF DESIGN ARE LEFT TO MANUFACTURER

4 Nur fuer FLR-Leitung nach DIN 72551 Teil 6
FOR FLR-CONDUCTOR ACCORDING TO DIN 72551-6 ONLY

5 -
-
-

6 nicht fuer Neuanwendung
NOT FOR NEW APPLICATION

7 zugverstaerkte Leitung nach LV 112-4
REINFORCED WIRE ACCORDING LV 112-4

8 Bei doppelt fallenden Werkzeugen wird die erste Ueberfeder
mit einer Kennzeichnung "-" versehen
WITH DOUBLE OUT DIES THE FIRST SPRING WILL BE PROVIDED
WITH AN INDICATION "-"

9 Varianten von Design1 werden durch die entsprechenden
Versionen von Design2 ersetzt
VARIANTS OF DESIGN1 ARE SUPERSEDED BY CORRESPONDING
VERSIONS OF DESIGN2

5:1

THIS DRAWING IS A CONTROLLED DOCUMENT.

DIMENSIONS: mm

TOLERANCES UNLESS OTHERWISE SPECIFIED: 0 PLC ±; 1 PLC ±0.2; 2 PLC ±0.1; 3 PLC ±0.05; 4 PLC ±0.025; ANGLES ±1°

MATERIAL -
FINISH -

DWN	S. Garcia	05JAN1999
CHK	R. Jetter	05JAN1999
APVD	M. Bleicher	13AUG2003
PRODUCT SPEC	108-18030	
APPLICATION SPEC	114-18021 / 114-18025	
WEIGHT	-	

TE Connectivity

NAME: MQS Tabellenzeichnung Buchsenkontakt / TABLE SOCKET CONTACT

SIZE	CAGE CODE	DRAWING NO	RESTRICTED TO
A1	00779	C-929454	-

CUSTOMER DRAWING | SCALE 10:1 | SHEET 1 OF 1 | REV C26

4805 (3/11)

X-ON Electronics

Largest Supplier of Electrical and Electronic Components

Click to view similar products for Automotive Connectors ***category:***

Click to view products by TE Connectivity ***manufacturer:***

Other Similar products are found below :

003-018-000 60403001 60993906-B M902-2131 M902-2161 72.330.1035.1 73.353.4028.0 F119300-B F166900 F258300-B F358300-B F407400 F444110 F487000 F509500B-B 827153-1 8N1515-32-24P 9-1326729-8 925474-1 928905-1 964562-4 968782-1 GT17SA-8DS-HU 98891-1012 98947-1016 12004147 12004475-L 12010290 12010309-B 12015454 12020219-B 12020308 12041318-B 12052225-L 12052466 12059125 12064869 12004327-B 12010503-B 12015308 12015384 12015909 1-21030-1 12041254 12041318 12047946-B 12047957 12047957-L 12059473 12066261