THIS DRAWING IS UNPUBLISHED. RELEASED FOR PUBLICATION – , – .
© COPYRIGHT – By – ALL RIGHTS RESERVED.

LOC	DIST
AD	00

REVISIONS

P	LTR	DESCRIPTION	DATE	DWN	APVD
	N4	REVISED PER ECO-12-008028	27APR12	KH	MM

1. THE NOTED DIMENSION APPLIES AT THE INTERSECTION OF THE POST AND HOUSING
2. POINT OF MEASUREMENT FOR PLATING THICKNESS.
3. POSTS: .000030 GOLD IN CONTACT AREA .000100–.000200 MATTE TIN LEAD ON SOLDER TAIL, ALL OVER .000050 NICKEL
4. POSTS: .000030 GOLD IN CONTACT AREA .000100–.000200 MATTE TIN ON SOLDER TAIL, ALL OVER .000050 NICKEL
5. OBSOLETE PARTS: OBSOLETE CIS STREAMLINING PER D.RENAUD/D.SINISI

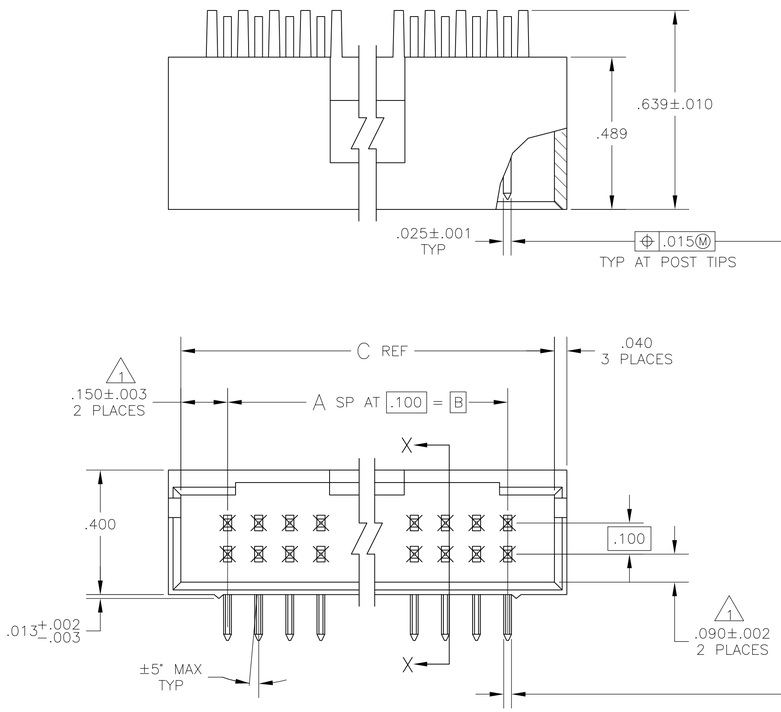

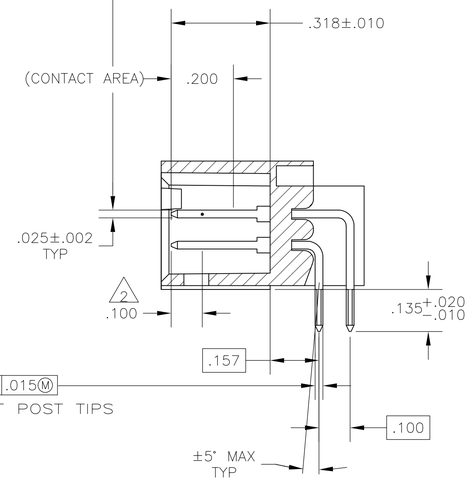

SECTION X–X

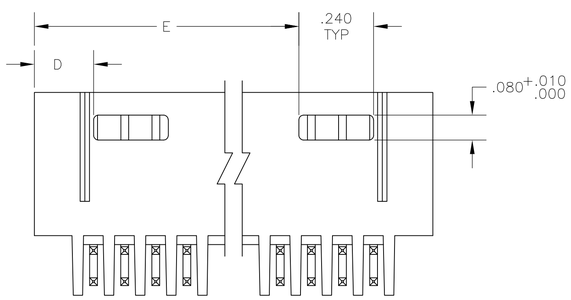

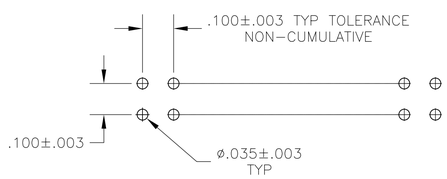

RECOMMENDED HOLE LAYOUT

PLATING	E	D	C	B	A	NO OF POSN	ASSEMBLY PART NUMBER
5 OBSOLETE	4	3.490	.190	3.800	3.500	35	72	8–103167–3
5 OBSOLETE	4	3.390	.190	3.700	3.400	34	70	8–103167–2
	4	3.290	.190	3.600	3.300	33	68	8–103167–1
5 OBSOLETE	4	3.190	.190	3.500	3.200	32	66	8–103167–0
5 OBSOLETE	4	3.090	.190	3.400	3.100	31	64	7–103167–9
5 OBSOLETE	4	2.990	.190	3.300	3.000	30	62	7–103167–8
	4	2.890	.190	3.200	2.900	29	60	7–103167–7
5 OBSOLETE	4	2.790	.190	3.100	2.800	28	58	7–103167–6
5 OBSOLETE	4	2.690	.190	3.000	2.700	27	56	7–103167–5
5 OBSOLETE	4	2.590	.190	2.900	2.600	26	54	7–103167–4
5 OBSOLETE	4	2.490	.190	2.800	2.500	25	52	7–103167–3
5 OBSOLETE	4	2.390	.190	2.700	2.400	24	50	7–103167–2
5 OBSOLETE	4	2.290	.190	2.600	2.300	23	48	7–103167–1
5 OBSOLETE	4	2.190	.190	2.500	2.200	22	46	7–103167–0
5 OBSOLETE	4	2.090	.190	2.400	2.100	21	44	6–103167–9
5 OBSOLETE	4	1.990	.190	2.300	2.000	20	42	6–103167–8
	4	1.890	.190	2.200	1.900	19	40	6–103167–7
5 OBSOLETE	4	1.790	.190	2.100	1.800	18	38	6–103167–6
5 OBSOLETE	4	1.690	.190	2.000	1.700	17	36	6–103167–5
	4	1.590	.190	1.900	1.600	16	34	6–103167–4
5 OBSOLETE	4	1.490	.190	1.800	1.500	15	32	6–103167–3
	4	1.390	.190	1.700	1.400	14	30	6–103167–2
5 OBSOLETE	4	1.290	.190	1.600	1.300	13	28	6–103167–1
	4	1.190	.190	1.500	1.200	12	26	6–103167–0
	4	1.090	.190	1.400	1.100	11	24	5–103167–9
	4	.990	.190	1.300	1.000	10	22	5–103167–8
	4	.890	.190	1.200	.900	9	20	5–103167–7
	4	—	.490	1.100	.800	8	18	5–103167–6
	4	—	.390	1.000	.700	7	16	5–103167–5
	4	—	.390	.900	.600	6	14	5–103167–4
	4	—	.290	.800	.500	5	12	5–103167–3
	4	—	.290	.700	.400	4	10	5–103167–2
5 OBSOLETE	4	—	.190	.600	.300	3	8	5–103167–1
5 OBSOLETE	3	3.490	.190	3.800	3.500	35	72	3–103167–3
5 OBSOLETE	3	3.390	.190	3.700	3.400	34	70	3–103167–2
	3	3.290	.190	3.600	3.300	33	68	3–103167–1
5 OBSOLETE	3	3.190	.190	3.500	3.200	32	66	3–103167–0
5 OBSOLETE	3	3.090	.190	3.400	3.100	31	64	2–103167–9
5 OBSOLETE	3	2.990	.190	3.300	3.000	30	62	2–103167–8
	3	2.890	.190	3.200	2.900	29	60	2–103167–7
5 OBSOLETE	3	2.790	.190	3.100	2.800	28	58	2–103167–6
5 OBSOLETE	3	2.690	.190	3.000	2.700	27	56	2–103167–5
5 OBSOLETE	3	2.590	.190	2.900	2.600	26	54	2–103167–4
5 OBSOLETE	3	2.490	.190	2.800	2.500	25	52	2–103167–3
	3	2.390	.190	2.700	2.400	24	50	2–103167–2
5 OBSOLETE	3	2.290	.190	2.600	2.300	23	48	2–103167–1
5 OBSOLETE	3	2.190	.190	2.500	2.200	22	46	2–103167–0
5 OBSOLETE	3	2.090	.190	2.400	2.100	21	44	1–103167–9
5 OBSOLETE	3	1.990	.190	2.300	2.000	20	42	1–103167–8
	3	1.890	.190	2.200	1.900	19	40	1–103167–7
5 OBSOLETE	3	1.790	.190	2.100	1.800	18	38	1–103167–6
5 OBSOLETE	3	1.690	.190	2.000	1.700	17	36	1–103167–5
	3	1.590	.190	1.900	1.600	16	34	1–103167–4
	3	1.490	.190	1.800	1.500	15	32	1–103167–3
	3	1.390	.190	1.700	1.400	14	30	1–103167–2
5 OBSOLETE	3	1.290	.190	1.600	1.300	13	28	1–103167–1
	3	1.190	.190	1.500	1.200	12	26	1–103167–0
	3	1.090	.190	1.400	1.100	11	24	103167–9
	3	.990	.190	1.300	1.000	10	22	103167–8
	3	.890	.190	1.200	.900	9	20	103167–7
5 SUPERSEDED	3	—	.490	1.100	.800	8	18	103167–6
	3	—	.390	1.000	.700	7	16	103167–5
	3	—	.390	.900	.600	6	14	103167–4
	3	—	.290	.800	.500	5	12	103167–3
	3	—	.290	.700	.400	4	10	103167–2
	3	—	.190	.600	.300	3	8	103167–1

THIS DRAWING IS A CONTROLLED DOCUMENT.

DIMENSIONS: INCHES

TOLERANCES UNLESS OTHERWISE SPECIFIED:
0 PLC ± –
1 PLC ± –
2 PLC ± –
3 PLC ± .005
4 PLC ± –
ANGLES ± –

MATERIAL: HOUSING: FLAME RETARDANT THERMOPLASTIC COLOR : BLACK
POST:PHOS BRONZE

FINISH: SEE TABLE

DWN H MOLL 27JUL87
CHK R FEIDT 28JUL87
APVD R FLICKER 29JUL87
PRODUCT SPEC —
APPLICATION SPEC —
WEIGHT —

TE Connectivity

NAME: HDR ASSY, MOD II, SHROUDED, 4 SIDES, DBL ROW, .100X.100 RIGHT ANGLE, W/ .025 SQ POSTS

SIZE	CAGE CODE	DRAWING NO	RESTRICTED TO
A1	00779	C-103167	—

CUSTOMER DRAWING | SCALE 4:1 | SHEET 1 OF 1 | REV N4

4805 (3/11)

X-ON Electronics

Largest Supplier of Electrical and Electronic Components

Click to view similar products for Headers & Wire Housings ***category:***

Click to view products by TE Connectivity ***manufacturer:***

Other Similar products are found below :

892-18-020-10-001101 58102-G61-06LF 582553-1 0009485154 009176003701906 0050291907 LY20-4P-DT1-P1E-BR 02.125.8002.8 609-3404 61062-3 61082-181009 622-3653LF 63453-116 636-1030 636-1427 636-3427 636-4007 641938-9 641991-4 644827-2 65817-010LF 65817-015LF 65863-015LF 66207-023LF 67095-007LF 67601157 68645-018 68648-049 70.362.1628.0 70-4210 70-4226B 70-4853B 707-5020 707-5028 71.350.2428.0 71918-208LF 71961-016LF 733-134 733-162 754199-000 760-3052 787-8014-00 79531-3000 FCN-360C032-B FCN-367T-T012/H FCN-723D010/2 80.063.4001.1 800-90-001-10-001000 800-90-010-10-002000 801-43-002-10-013000