© – TE Connectivity. All Rights Reserved.

REVISIONS					
P	LTR	DESCRIPTION	DATE	DWN	APVD
	H	REVISED PER ECO-20-001327	05JUN2020	SB	JO

1. .00076[.000030] GOLD IN THE CONTACT AREA, .00254[.000100]–.00508[.000200] MATTE TIN–LEAD ON THE SOLDER TAIL, ALL OVER .00127[.000050] NICKEL
2. POINT OF MEASUREMENT FOR PLATING THICKNESS
3. THE NOTED DIMENSIONS APPLY FROM THE BASIC DIMENSION LINE (NOT THE POST CENTERLINE) TO THE SURFACE INDICATED
4. ON ASSEMBLIES WITH FOUR OR MORE POSITIONS, TWO POLARIZATION SLOTS. ON ASSEMBLIES WITH TWO OR THREE POSITIONS, ONE POLARIZATION SLOT.
5. DIMENSIONS NOTED ARE FOR SOLDER STENCIL LAYOUT FOR USE WITH A 1.57±0.20 [.062±.008] THICK PRINTED CIRCUIT BOARD
6. MATERIAL: HOUSING – HIGH TEMPERATURE LCP
   COLOR: BLACK
   POSTS – BRASS
7. .00076[.000030] GOLD IN THE CONTACT AREA, .00254[.000100]–.00508[.000200] MATTE TIN ON THE SOLDER TAIL, ALL OVER .00127[.000050] NICKEL
8. OBSOLETE PARTS: OBSOLETE CIS STREAMLINING PER D.RENAUD/D.SINISI
9. 0.25 [.010] RECESS PERMISSIBLE IN THIS AREA FOR MOLD SHUT OFF

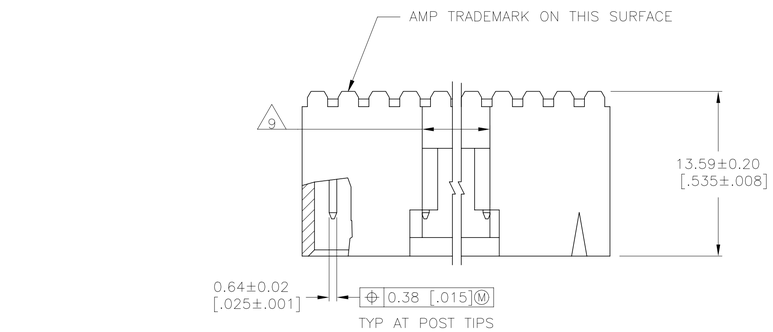

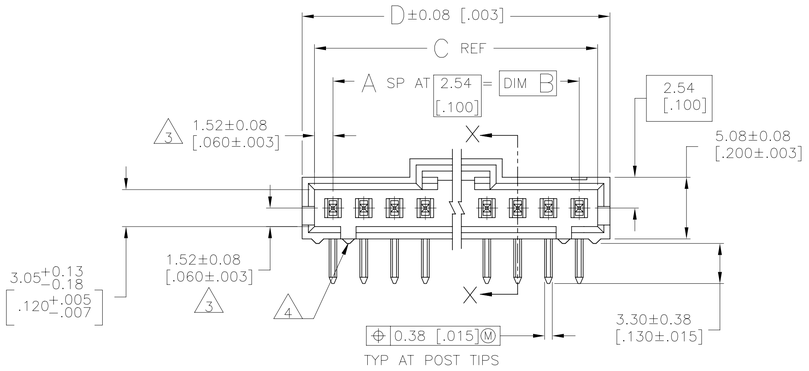

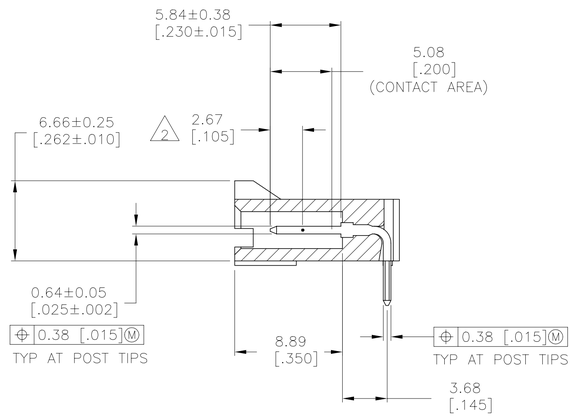

SECTION X–X

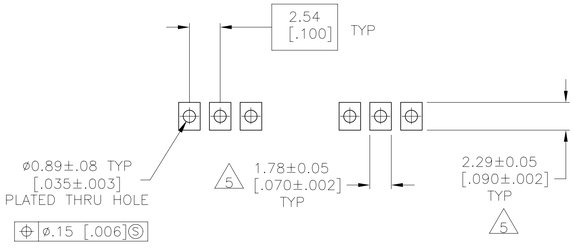

RECOMMENDED PC BOARD MOUNTING DIMENSIONS
RECOMMENDED STENCIL THICKNESS = 0.25 [.010]

PLATING	D	C	B	A	NO OF POSN	PART NUMBER
7	2.595	2.520	2.400	24	25	7-104935-4
7	2.495	2.420	2.300	23	24	7-104935-3
7	2.395	2.320	2.200	22	23	7-104935-2
7	2.295	2.220	2.100	21	22	7-104935-1
7	2.195	2.120	2.000	20	21	7-104935-0
7	2.095	2.020	1.900	19	20	6-104935-9
7	1.995	1.920	1.800	18	19	6-104935-8
7	1.895	1.820	1.700	17	18	6-104935-7
7	1.795	1.720	1.600	16	17	6-104935-6
7	1.695	1.620	1.500	15	16	6-104935-5
7	1.595	1.520	1.400	14	15	6-104935-4
7	1.495	1.420	1.300	13	14	6-104935-3
7	1.395	1.320	1.200	12	13	6-104935-2
7	1.195	1.120	1.000	10	11	6-104935-1
7	1.095	1.020	.900	9	10	6-104935-0
7	.995	.920	.800	8	9	5-104935-9
7	.795	.720	.600	6	7	5-104935-8
7	.695	.620	.500	5	6	5-104935-7
7	.595	.520	.400	4	5	5-104935-6
7	7.49 [.295]	5.59 [.220]	2.54 [.100]	1	2	5-104935-5
	32.89 [1.295]	30.99 [1.220]	27.94 [1.100]	11	12	5-104935-4
	10.03 [.395]	8.13 [.320]	5.08 [.200]	2	3	5-104935-3
	22.73 [.895]	20.83 [.820]	17.78 [.700]	7	8	5-104935-2
	12.57 [.495]	10.67 [.420]	7.62 [.300]	3	4	5-104935-1
1	7.49 [.295]	5.59 [.220]	2.54 [.100]	1	2	104935-5
	32.89 [1.295]	30.99 [1.220]	27.94 [1.100]	11	12	104935-4
	10.03 [.395]	8.13 [.320]	5.08 [.200]	2	3	104935-3
	22.73 [.895]	20.83 [.820]	17.78 [.700]	7	8	104935-2
	12.57 [.495]	10.67 [.420]	7.62 [.300]	3	4	~~104935-1~~

8 SUPERSEDED BY 5-104935-1

THIS DRAWING IS A CONTROLLED DOCUMENT.

DIMENSIONS: mm [INCHES]

TOLERANCES UNLESS OTHERWISE SPECIFIED:
0 PLC ± –
1 PLC ± –
2 PLC ± –
3 PLC ± .005
4 PLC ± –
ANGLES ± –

MATERIAL 6

FINISH POST : SEE TABLE

DWN E. BRANDBERG 27-JUL-95
CHK J. GESFORD 27-JUL-95
APVD D. DUPLER 27-JUL-95
PRODUCT SPEC —
APPLICATION SPEC —
WEIGHT —

TE Connectivity

NAME HEADER ASSY, AMPMODU MTE, RIGHT ANGLE, SINGLE ROW, .100CL, .025 SQ POSTS, WITH LATCH

SIZE	CAGE CODE	DRAWING NO	RESTRICTED TO
A1	00779	C-104935	—

CUSTOMER DRAWING | SCALE 4:1 | SHEET 1 OF 1 | REV H

4805 (1/15)

X-ON Electronics

Largest Supplier of Electrical and Electronic Components

Click to view similar products for Headers & Wire Housings ***category:***

Click to view products by TE Connectivity ***manufacturer:***

Other Similar products are found below :

892-18-020-10-001101 58102-G61-06LF 582553-1 0009485154 009176003701906 0050291907 LY20-4P-DT1-P1E-BR 02.125.8002.8 609-3404 61062-3 61082-181009 622-3653LF 63453-116 636-1030 636-1427 636-3427 636-4007 641938-9 641991-4 644827-2 65817-010LF 65817-015LF 65863-015LF 66207-023LF 67095-007LF 67601157 68645-018 68648-049 70.362.1628.0 70-4210 70-4226B 70-4853B 707-5020 707-5028 71.350.2428.0 71918-208LF 71961-016LF 733-134 733-162 754199-000 760-3052 787-8014-00 79531-3000 FCN-360C032-B FCN-367T-T012/H FCN-723D010/2 80.063.4001.1 800-90-001-10-001000 800-90-010-10-002000 801-43-002-10-013000