DRAWING MADE IN THIRD ANGLE PROJECTION

© COPYRIGHT 1975-83 BY AMP INCORPORATED, HARRISBURG, PA. ALL INTERNATIONAL RIGHTS RESERVED. AMP INCORPORATED PRODUCTS COVERED BY U. S. AND FOREIGN PATENTS AND/OR PATENTS PENDING.

| LOC | DIST |
|---|---|
| AD | 39 |

REVISIONS

| P | F | ZONE | LTR | DESCRIPTION | DATE | APPROVED |
|---|---|---|---|---|---|---|
| ✓ | | | G | REV PER AD-5084 | 2-1-91 | RF |
| ✓ | ✓ | | H | REV PER AD-5161 | 2-1-91 | RF |
| ✓ | | | J | REV PER 0010-0981-93 RAC | 9-93 | JA |
| ✓ | | | K | REV PER 0310-0146-96 CB | 2-27-97 | SAS |
| ✓ | | | L | REV PER 0310-0437-97 CB | 12-3-97 | SAS |
| | | | L1 | REVISED PER ECO-10-000445 | JAN10 | HMR |

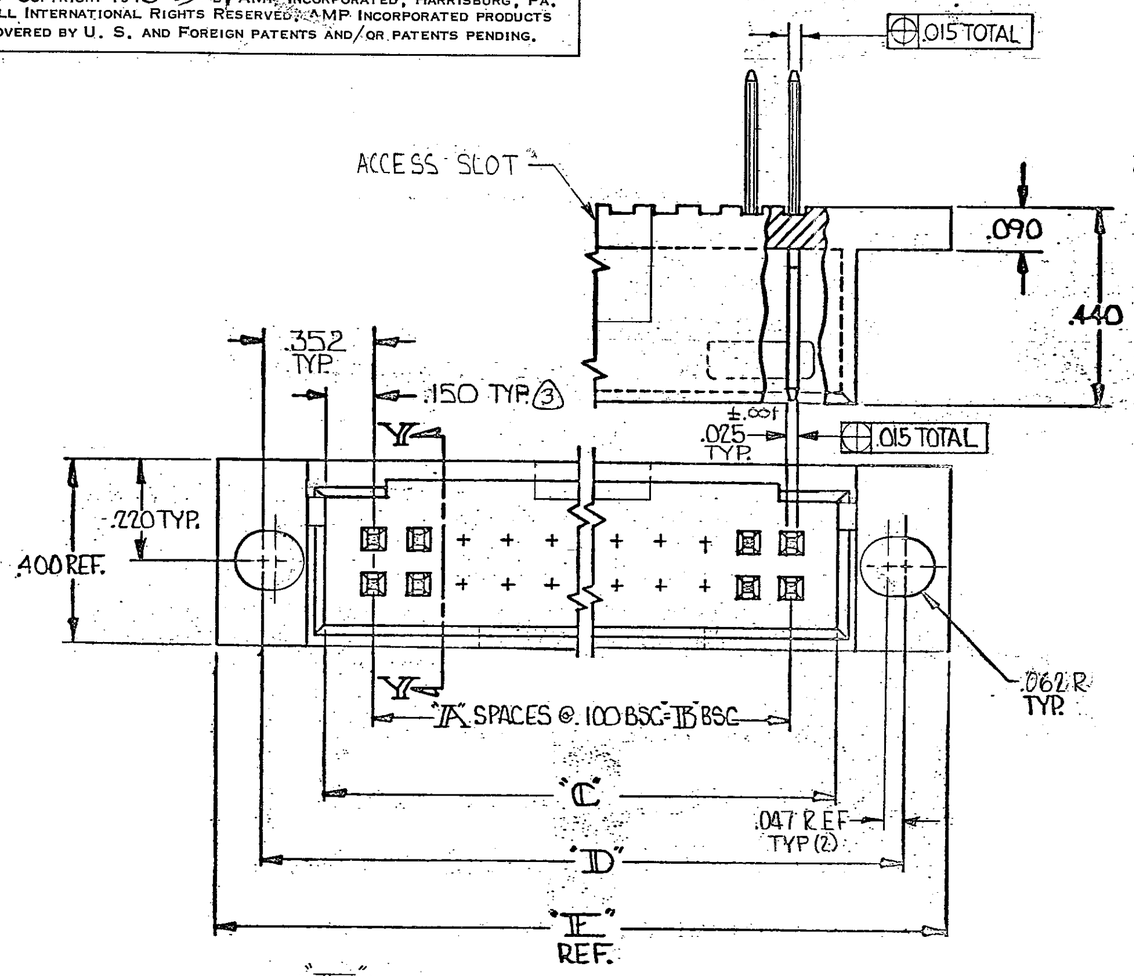


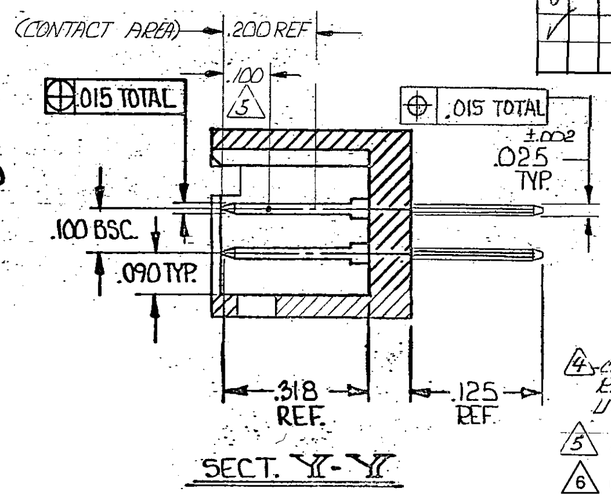


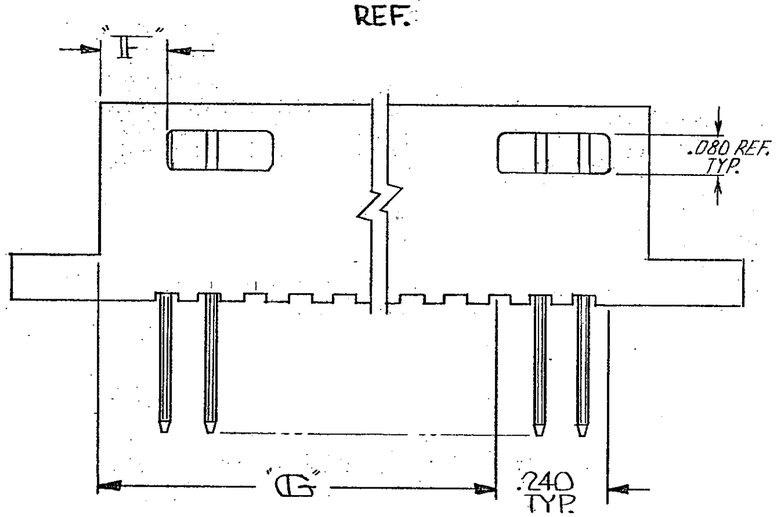


(5) .000030 GOLD ON CONTACT AREA, GOLD FLASH ON SOLDER AREA ALL OVER .000050 MIN. NICKEL ON ENTIRE POST.

(3) WILL ALSO MATE WITH OTHER CONNECTORS WHICH ARE COMPATIBLE WITH THE .150 END DIM AND WILL MATE W/MOD IV HAVING FOUR EXTRA EMPTY CIRCUITS (TWO EA. END) --- EX: 20 POS. POST HEADER WILL MATE WITH 24 POS. MOD IV HOUSING.

(4) CUSTOMER P.C. BRD. LAYOUT MAY VARY WITHIN THIS RANGE. WHEN MATING WITH MOD IV CONNECTORS UTILIZING JACKSCREW HARDWARE USE D-.094" AND .345 TYP.

(5) POINT OF MEASUREMENT FOR PLATING THICKNESS.

(6) OBSOLETE PARTS: OBSOLETE CIS STREAMLINING PER D.RENAUD/D.SINISI

| | "G" | "F" | "E" | "D" | "C" | "B" | "A" | FINISH | NO. OF POS. | PART NO |
|---|---|---|---|---|---|---|---|---|---|---|
| | 2.890 | .190 | 3.804 | 3.604 | 3.100 | 2.900 | 29 | (1) | 60 | 87474-6 |
| | 2.790 | | 3.704 | 3.504 | 3.100 | 2.800 | 28 | | 58 | -5 |
| | 2.690 | | 3.604 | 3.404 | 3.000 | 2.700 | 27 | | 56 | -4 |
| | 2.590 | | 3.504 | 3.304 | 2.900 | 2.600 | 26 | | 54 | -3 |
| | 2.490 | | 3.404 | 3.204 | 2.800 | 2.500 | 25 | | 52 | -2 |
| | 2.290 | | 3.204 | 3.004 | 2.600 | 2.300 | 23 | | 48 | -1 |
| OBSOLETE | 2.190 | | 3.104 | 2.904 | 2.500 | 2.200 | 22 | | 46 | -0 |
| | 2.090 | | 3.004 | 2.804 | 2.400 | 2.100 | 21 | | 44 | -9 |
| | 1.990 | | 2.904 | 2.704 | 2.300 | 2.000 | 20 | | 42 | -8 |
| | 1.690 | | 2.604 | 2.404 | 2.000 | 1.700 | 17 | | 36 | -7 |
| | 1.490 | | 2.404 | 2.204 | 1.800 | 1.500 | 15 | | 32 | -6 |
| | 1.390 | | 2.304 | 2.104 | 1.700 | 1.400 | 14 | | 30 | -5 |
| | 1.290 | | 2.204 | 2.004 | 1.600 | 1.300 | 13 | | 28 | -4 |
| (6) OBSOLETE | 1.090 | | 2.004 | 1.804 | 1.400 | 1.100 | 11 | | 24 | -3 |
| OBSOLETE | .990 | .190 | 1.904 | 1.704 | 1.300 | 1.000 | 10 | | 22 | -2 |
| OBSOLETE | — | .490 | 1.704 | 1.504 | 1.100 | .800 | 8 | | 18 | -1 |
| OBSOLETE | — | .390 | 1.604 | 1.404 | 1.000 | .700 | 7 | | 16 | -0 |
| (6) OBSOLETE | — | .390 | 1.504 | 1.304 | .900 | .600 | 6 | | 14 | -9 |
| OBSOLETE | — | .290 | 1.404 | 1.204 | .800 | .500 | 5 | | 12 | -8 |
| | 2.390 | .190 | 3.304 | 3.104 | 2.700 | 2.400 | 24 | (1) | 50 | 87474-7 |
| | 1.890 | .190 | 2.804 | 2.604 | 2.200 | 1.900 | 19 | | 40 | -6 |
| OBSOLETE | 1.790 | .190 | 2.704 | 2.504 | 2.100 | 1.800 | 18 | | 38 | -5 |
| | 1.590 | .190 | 2.504 | 2.304 | 1.900 | 1.600 | 16 | | 34 | -4 |
| (6) OBSOLETE | 1.190 | .190 | 2.104 | 1.904 | 1.500 | 1.200 | 12 | | 26 | -3 |
| | .890 | .190 | 1.804 | 1.604 | 1.200 | .900 | 9 | | 20 | -2 |
| | — | .290 | 1.304 | 1.104 | .700 | .400 | 4 | (1) | 10 | 87474-1 |

CUST. 87474

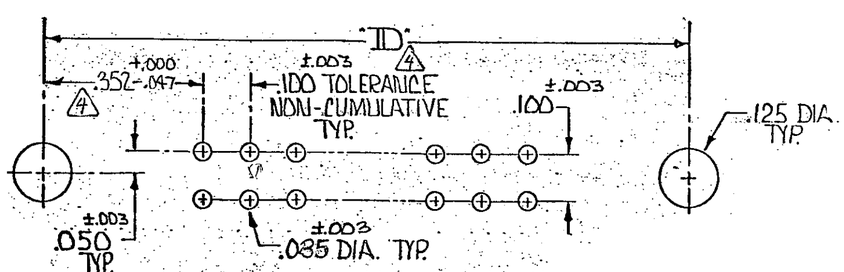


RECOMMENDED HOLE LAYOUT

UNLESS OTHERWISE SPECIFIED DIMENSIONS ARE IN INCHES.
TOLERANCES ON:
DECIMALS ±.005
ANGLES ± —

MATERIAL
HSG. = GLASS FILLED NYLON COLOR- BLACK
POST = PHOS. BRONZE

FINISH
SEE TABLE

CONTRACT NO

DR B.A. Wolfe 10-13-75
CHK D.M. Pitts 10-14-75
APPD B. Bennett 10-14-75
APPD E. Lozinski 10/14/75
DSGN APPD
OTHER APPD

AMP INCORPORATED Harrisburg, Pa.

NAME
HEADER ASSY., MOD II, .025 SQ. POST, DBL. ROW, .100 x .100 CENTERS, W/ MTG. EARS & DETENT SLOTS (MATES W/ AMP LATCH OR FFC) (2)

| SIZE | CODE IDENT NO | DRAWING NO |
|---|---|---|
| C | 00779 | 87474 |

SCALE | SHEET

AMP 1471-6 (7-73)

CUSTOMER DRAWING

# X-ON Electronics

Largest Supplier of Electrical and Electronic Components

***Click to view similar products for*** Headers & Wire Housings ***category:***

***Click to view products by*** TE Connectivity ***manufacturer:***

Other Similar products are found below :

892-18-020-10-001101 58102-G61-06LF 582553-1 0009485154 009176003701906 0050291907 LY20-4P-DT1-P1E-BR 02.125.8002.8 609-3404 61062-3 61082-181009 622-3653LF 63453-116 636-1030 636-1427 636-3427 636-4007 641938-9 641991-4 644827-2 65817-010LF 65817-015LF 65863-015LF 66207-023LF 67095-007LF 67601157 68645-018 68648-049 70.362.1628.0 70-4210 70-4226B 70-4853B 707-5020 707-5028 71.350.2428.0 71918-208LF 71961-016LF 733-134 733-162 754199-000 760-3052 787-8014-00 79531-3000 FCN-360C032-B FCN-367T-T012/H FCN-723D010/2 80.063.4001.1 800-90-001-10-001000 800-90-010-10-002000 801-43-002-10-013000