THIS DRAWING IS UNPUBLISHED. RELEASED FOR PUBLICATION -,- .
© COPYRIGHT - By - ALL RIGHTS RESERVED.

LOC	DIST
AD	00

REVISIONS

P	LTR	DESCRIPTION	DATE	DWN	APVD
	R	REVISED PER ECO-11-011767	08JUN11	HMR	MM

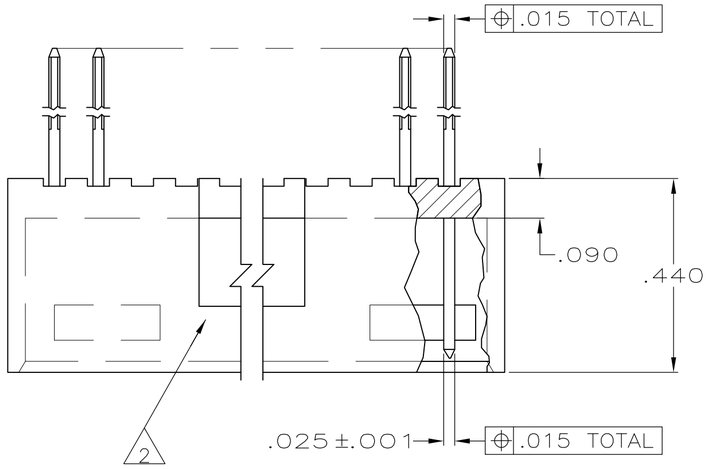

1. WILL ALSO MATE W/OTHER CONNECTORS WHICH ARE COMPATIBLE WITH THE .066 END DIM.
2. ACCESS SLOT.
3. .000030 GOLD IN CONTACT AREA, GOLD FLASH ON SOLDER AREA, ALL OVER .000050 MIN NICKEL ON ENTIRE POST.
4. OBSOLETE PARTS: OBSOLETE CIS STREAMLINING PER D.RENAUD/D.SINISI

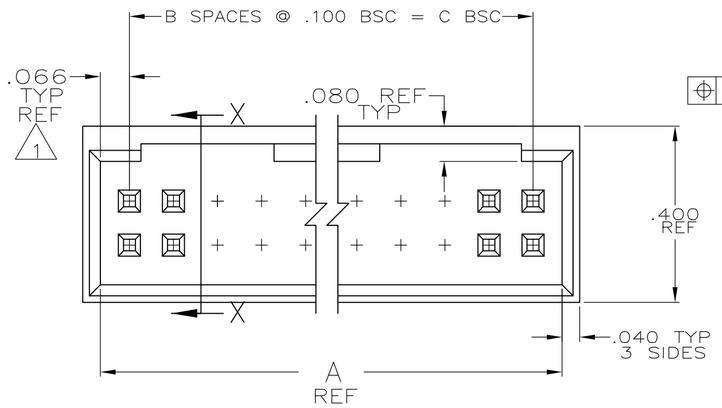

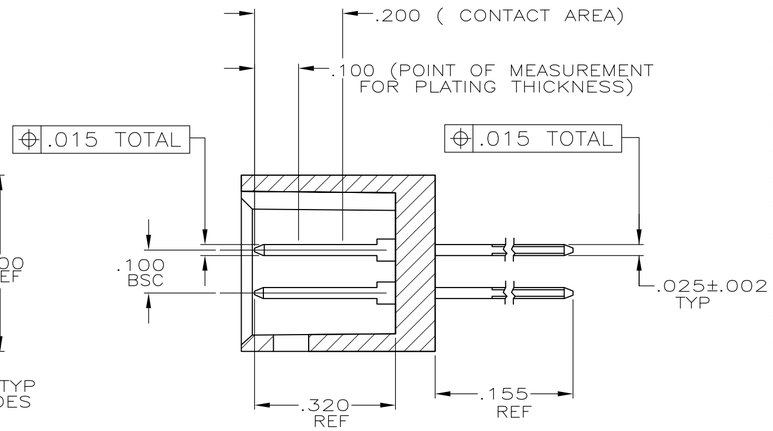

SECTION X—X

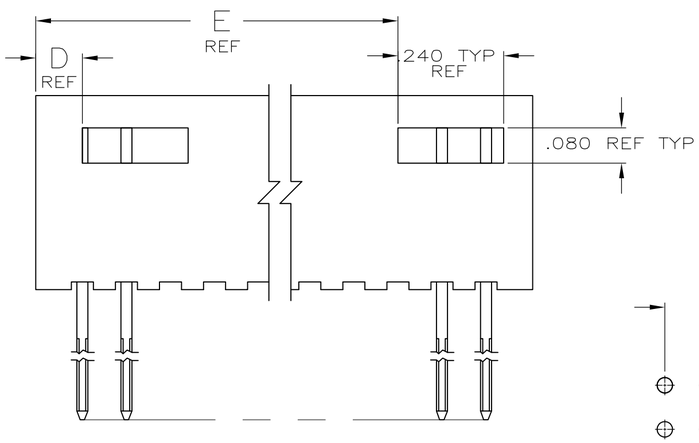

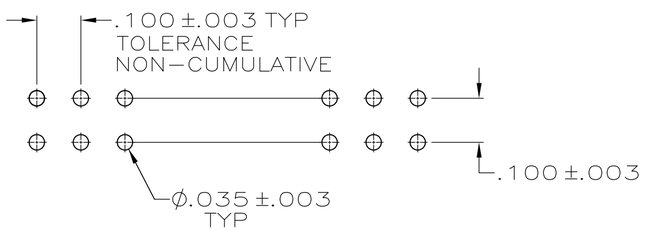

RECOMMENDED HOLE LAYOUT

	E	D	C	B	A	NO OF POSN	PART NUMBER
	–	.106	.300	3	.432	8	3-87690-5
	–	.106	200	2	.332	6	3-87690-4
4 OBSOLETE	3.506	.106	3.600	36	3.732	74	3-87690-3
4 OBSOLETE	3.406		3.500	35	3.632	72	3- -2
4 OBSOLETE	3.306		3.400	34	3.532	70	3- -1
4 OBSOLETE	3.206		3.300	33	3.432	68	3- -0
4 OBSOLETE	3.106		3.200	32	3.332	66	2- -9
4 OBSOLETE	3.006		3.100	31	3.232	64	2- -8
4 OBSOLETE	2.906		3.000	30	3.132	62	2- -7
4 OBSOLETE	2.806		2.900	29	3.032	60	2- -6
4 OBSOLETE	2.706		2.800	28	2.932	58	2- -5
4 OBSOLETE	2.606		2.700	27	2.832	56	2- -4
4 OBSOLETE	2.506		2.600	26	2.732	54	2- -3
4 OBSOLETE	2.406		2.500	25	2.632	52	2- -2
4 OBSOLETE	2.306		2.400	24	2.532	50	2- -1
4 OBSOLETE	2.206		2.300	23	2.432	48	2- -0
4 OBSOLETE	2.106		2.200	22	2.332	46	1- -9
4 OBSOLETE	2.006		2.100	21	2.232	44	1- -8
4 OBSOLETE	1.906		2.000	20	2.132	42	1- -7
	1.806		1.900	19	2.032	40	1- -6
4 OBSOLETE	1.706		1.800	18	1.932	38	1- -5
4 OBSOLETE	1.606		1.700	17	1.832	36	1- -4
4 OBSOLETE	1.506		1.600	16	1.732	34	1- -3
4 OBSOLETE	1.406		1.500	15	1.632	32	1- -2
4 OBSOLETE	1.306		1.400	14	1.532	30	1- -1
4 OBSOLETE	1.206		1.300	13	1.432	28	1- -0
	1.106		1.200	12	1.332	26	-9
	1.006		1.100	11	1.232	24	-8
	.906		1.000	10	1.132	22	-7
4 OBSOLETE	.806	.106	.900	9	1.032	20	-6
4 OBSOLETE	–	.406	.800	8	.932	18	-5
	–	.306	.700	7	.832	16	-4
	–	.306	.600	6	.732	14	-3
	–	.206	.500	5	.632	12	-2
	–	.206	.400	4	.532	10	87690-1

87690

THIS DRAWING IS A CONTROLLED DOCUMENT.

DIMENSIONS: mm [INCHES]

TOLERANCES UNLESS OTHERWISE SPECIFIED:
0 PLC ± –
1 PLC ± –
2 PLC ± –
3 PLC ± .005
4 PLC ± –
ANGLES ± –

MATERIAL: HSG.– GLASS FILLED NYLON COLOR–BLACK CONTACT–PHOS. BRONZE

FINISH: CONTACT– 4

DWN	B. HAYMAKER	08OCT98
CHK	L. REGER	08OCT98
APVD	L. REGER	08OCT98
PRODUCT SPEC	—	
APPLICATION SPEC	—	
WEIGHT	—	

TE Connectivity

NAME: (MATES WITH MOD IV OR LOCKING CLIP 1) HEADER ASSEMBLY MOD II .100 ¢.025 SQUARE POST WITH DETAINT

SIZE	CAGE CODE	DRAWING NO	RESTRICTED TO
A2	00779	C-87690	—

CUSTOMER DRAWING | SCALE 4:1 | SHEET 1 OF 1 | REV R

1471-9 (3/11)

X-ON Electronics

Largest Supplier of Electrical and Electronic Components

Click to view similar products for Headers & Wire Housings ***category:***

Click to view products by TE Connectivity ***manufacturer:***

Other Similar products are found below :

892-18-020-10-001101 58102-G61-06LF 582553-1 0009485154 009176003701906 0050291907 LY20-4P-DT1-P1E-BR 02.125.8002.8 609-3404 61062-3 61082-181009 622-3653LF 63453-116 636-1030 636-1427 636-3427 636-4007 641938-9 641991-4 644827-2 65817-010LF 65817-015LF 65863-015LF 66207-023LF 67095-007LF 67601157 68645-018 68648-049 70.362.1628.0 70-4210 70-4226B 70-4853B 707-5020 707-5028 71.350.2428.0 71918-208LF 71961-016LF 733-134 733-162 754199-000 760-3052 787-8014-00 79531-3000 FCN-360C032-B FCN-367T-T012/H FCN-723D010/2 80.063.4001.1 800-90-001-10-001000 800-90-010-10-002000 801-43-002-10-013000