THIS DRAWING IS UNPUBLISHED. RELEASED FOR PUBLICATION 2008
© COPYRIGHT 2008 Tyco Electronics AMP GmbH ALL RIGHTS RESERVED.

LOC	DIST
A1	-

REVISIONS

P	LTR	DESCRIPTION	DATE	DWN	APVD
	J2	NEW VERSION OF GOLD CONTACTS PERMITTED.	18MAY2011	Kirs	Mair
	J3	OPTIONAL to note 8 TTD added. (area A3)	28JUN2011	Kirs	Mair
	J4	SURFACE ERROR (962942-6) CHANGE NOTE 1 TO NOTE 2	06MAR2012	Kirs	Eder
	J5	SET PN´s OBSOLETE	17JUN2014	Ho.	Eder

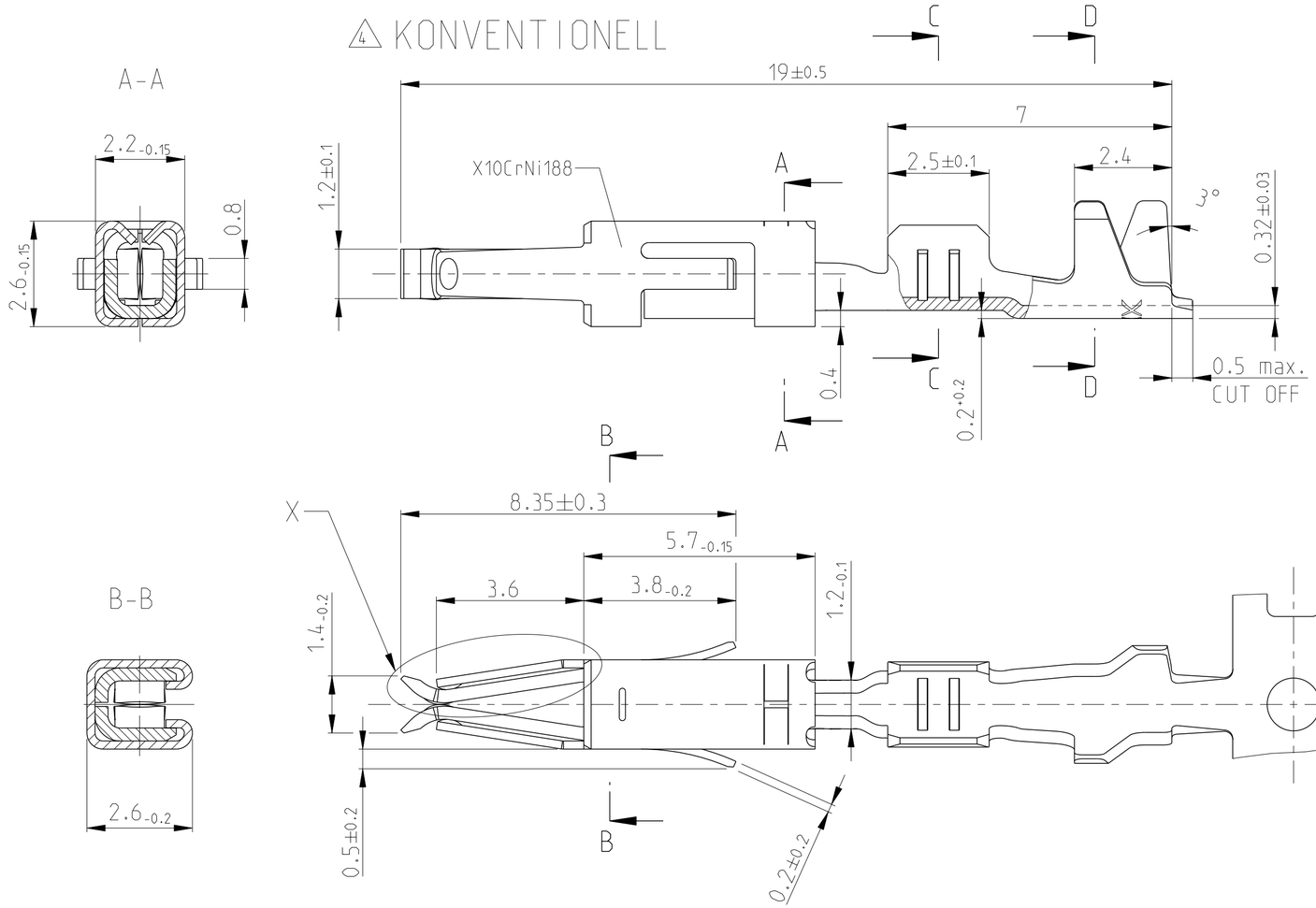

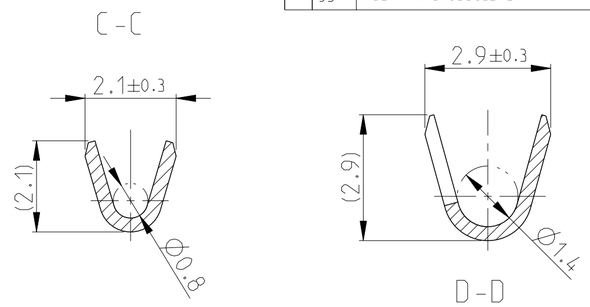

NOTES
Bemerkungen

1. SELECTIVE GOLD OVER NICKEL 0.8 µm MIN.
selektiv vergoldet ueber Nickel 0.8 µm min.

2. TIN PLATED OVER NICKEL 0.2 µm MIN.
verzinnt ueber Nickel 0.2 µm min.

3. WIRE RANGE : 0.2 - 0.5 mm²
INSULATION-Ø : 1.15 - 1.6 mm (FLR)
Drahtgroessenbereich : 0.2 - 0.5 mm²
Isolations-Ø : 1.15 - 1.6 mm (FLR)

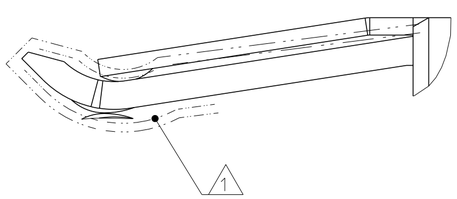

X
M 20:1

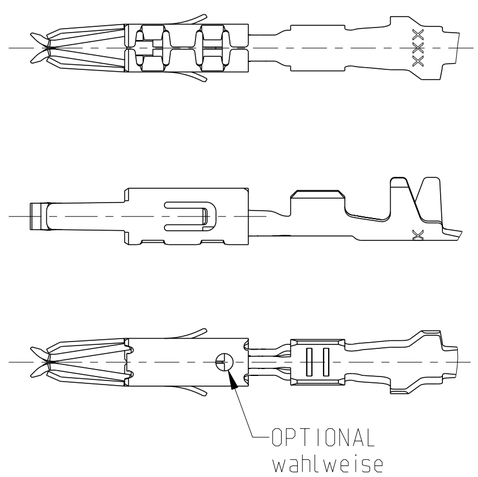

5 TWO TRACK DIE
M 5:1

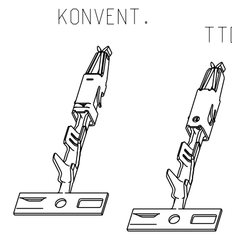

2:1

VERSION	LP NO	SURFACE / Oberflaeche	MATERIAL	PART NO	REV
4 5	962944-5	1 2	CuFe2	962942-5	J
4 5	962944-3	1 2	CuSn4	962942-3	J
5	962944-2	PRETIN	CuFe2	962942-2	J
5	962944-1	PRETIN	CuSn4	962942-1	J

THIS DRAWING IS A CONTROLLED DOCUMENT.

DIMENSIONS: mm

TOLERANCES UNLESS OTHERWISE SPECIFIED:
0 PLC ±
1 PLC ±
2 PLC ± ±0.2
3 PLC ±
4 PLC ±
ANGLES ±2°

MATERIAL -
FINISH -

DWN M.Pfeilschifter 24-JUL-03
CHK M.Brunner 24-JUL-03
APVD M.Bleicher 24-JUL-03
PRODUCT SPEC 108-18055
APPLICATION SPEC 114-18081
WEIGHT 0.3 g

TE Connectivity

NAME
MICRO TIMER 2 CONTACT
Micro Timer 2 Kontakt
-

SIZE	CAGE CODE	DRAWING NO	RESTRICTED TO
A2	00779	C-962942	-

Customer Drawing | SCALE 10:1 | SHEET 1 OF 1 | REV J5

X-ON Electronics

Largest Supplier of Electrical and Electronic Components

Click to view similar products for Automotive Connectors ***category:***

Click to view products by TE Connectivity ***manufacturer:***

Other Similar products are found below :

003-018-000 60403001 60993906-B M902-2131 M902-2161 72.330.1035.1 73.353.4028.0 F119300-B F166900 F258300-B F358300-B F407400 F444110 F487000 F509500B-B 827153-1 8N1515-32-24P 9-1326729-8 925474-1 928905-1 964562-4 968782-1 GT17SA-8DS-HU 98891-1012 98947-1016 12004147 12004475-L 12010290 12010309-B 12015454 12020219-B 12020308 12041318-B 12052225-L 12052466 12059125 12064869 12004327-B 12010503-B 12015308 12015384 12015909 1-21030-1 12041254 12041318 12047946-B 12047957 12047957-L 12059473 12066261