THIS DRAWING IS UNPUBLISHED.
VERTRAULICHE UNVEROEFFENTLICHTE ZEICHNUNG
© COPYRIGHT – By –
RELEASED FOR PUBLICATION:
FREIGEGEBEN FÜR VEROEFFENTLICHUNG
ALL RIGHTS RESERVED.
ALLE RECHTE VORBEHALTEN.

MATED WITH:
PASSEND ZU: –

was 116–18001–001

LOC	DIST
AI	–

PROJECT NR.: –

REVISIONS
ÄNDERUNGEN

P	LTR	DESCRIPTION BESCHREIBUNG	DATE	DWN	APVD
	A4	REVISED PER ECR–11–025934	28DEC11	RK	HMR

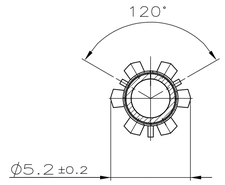

SECTION D–D
Schnitt

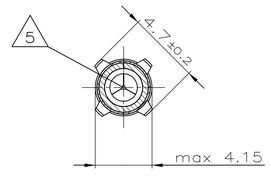

SECTION E–E
Schnitt

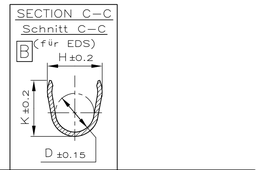

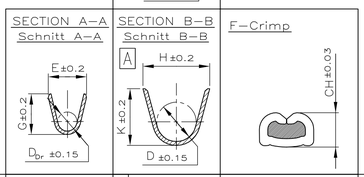

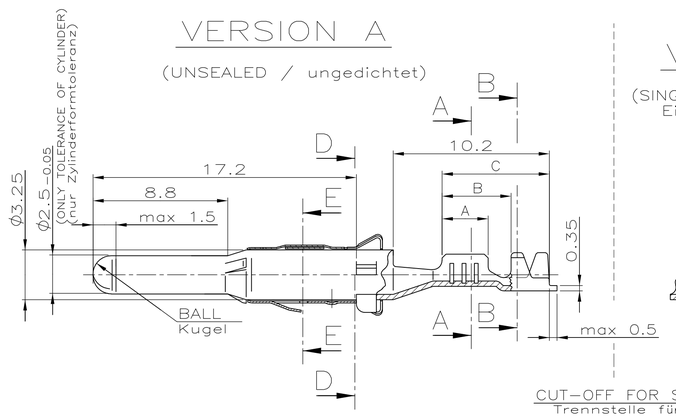

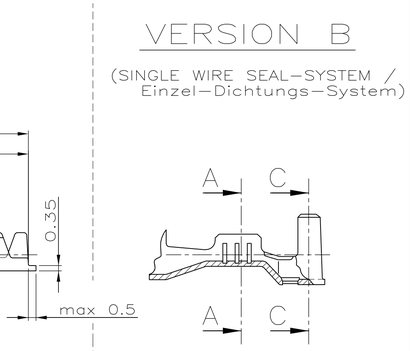

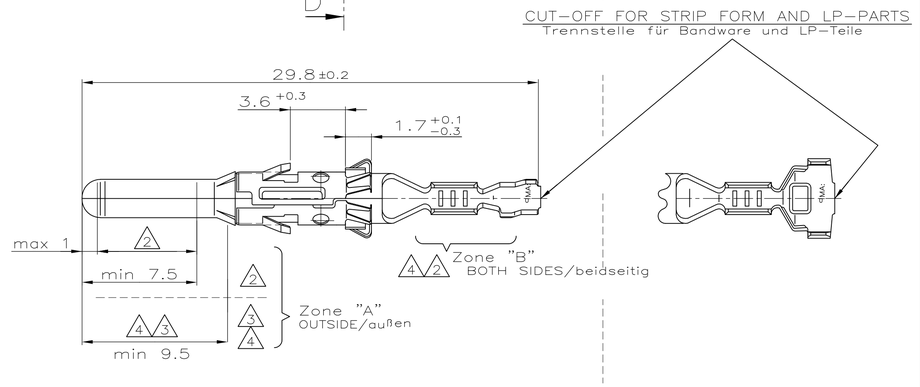

Version	TE CONNECTIVITY ORDER–Nr. STRIP FORM Bandware	TE CONNECTIVITY ORDER–Nr. LOOSE PIECE Einzelausführung	REV.	MATERIAL Werkstoff	SURFACE Oberfläche	DGB [mm²]	WIRE CRIMP Drahtcrimp	INSUL.–CRIMP Isol.–Crimp	WIRE CRIMP HEIGHT CH Drahtcrimp–Höhe CH	APPLICATION TOOL Anschlag–WKZ	HAND TOOL Handzange	A	B	C
							CRIMP DIMENSION (mm) Crimpabmessungen (mm)			EXTRACTION TOOL Ausdrückwerkzeug Nr.: 872070–1				
Version B (SINGLE WIRE SEAL–SYSTEM / Einzel–Dichtungs–System)	6 1–929968–0	1–962972–0	M	CuFe2	2	>1.0–2.5 FLR	B: E = 3.6, G = 3.8, D_{Dr} = 1.7	B: H = 5.0, K = 5.0, D = 3.6	2.5mm² = 1.97; 2.0mm² = 1.82; 1.5mm² = 1.67	MQC–Applicator 2–878486–2	734289–2	4	6.9	8.5
	6 929968–9	962972–9	M		3									
	6 929968–8	962972–8	M	CuNiSi	2									
	929968–7	962972–7	M		3									
	6 929968–4	962972–4	M	CuFe2	1									
	929968–1	962972–1	M	CuNiSi	1									
	1–929967–4	1–962971–4	A	CuNiSi	4	0.5–1.0 FLR	B: E = 2.6, G = 2.8, D_{Dr} = 1.1	B: H = 4.8, K = 4.8, D = 3.2	1.0mm² = 1.45; 0.75mm² = 1.36; 0.5mm² = 1.27	MQC–Applicator 2–878485–2	734289–1	3	5.4	7
	1–929967–0	1–962971–0	M	CuFe2	2									
	6 929967–9	962971–9	M		3									
	929967–8	962971–8	M	CuNiSi	2									
	929967–7	962971–7	M		3									
	6 929967–4	962971–4	M	CuFe2	1									
	929967–1	962971–1	M	CuNiSi	1									
	6 1–929966–0	1–962970–0	M	CuFe2	2	0.2–0.4 FLR	B: E = 2.1, G = 2.1, D_{Dr} = 0.8	B: H = 4.5, K = 4.5, D = 3.2	0.35mm² = 1.11	MQC–Applicator 2–878484–2	734289–1	3	5.4	7
	6 929966–9	962970–9	M		3									
	6 929966–8	962970–8	M	CuNiSi	2									
	929966–7	962970–7	M		3									
	6 929966–4	962970–4	M	CuFe2	1									
	929966–1	962970–1	M	CuNiSi	1									
Version A (UNSEALED / ungedichtet)	6 1–929965–0	1–962969–0	J	CuFe2	2	>2.5–4.0 FLR	A: E = 4.3, G = 4.5, D_{Dr} = 2.4	A: H = 5.4, K = 5.6, D = 3.2	4.0mm² = 2.30; 3.0mm² = 2.05	MQC–Applicator 2–878483–2	734285–3	4	5.5	8.5
	6 929965–9	962969–9	J		3									
	6 929965–8	962969–8	J	CuNiSi	2									
	6 929965–7	962969–7	J		3									
	6 929965–4	962969–4	J	CuFe2	1									
	929965–1	962969–1	J	CuNiSi	1									
						>1.0–2.5 FLR	A: E = 3.6, G = 3.8, D_{Dr} = 1.7	A: H = 4.3, K = 4.5, D = 2.6	2.5mm² = 1.97; 2.0mm² = 1.82; 1.5mm² = 1.67; 1.25mm² = 1.60	MQC–Applicator 2–878482–2	734285–2	4	5.5	8.5
	1–929964–0	1–962968–0	J	CuFe2	2									
	6 929964–9	962968–9	J		3									
	6 929964–8	962968–8	J	CuNiSi	2									
	6 929964–7	962968–7	J		3									
	6 929964–4	962968–4	J	CuFe2	1									
	929964–1	962968–1	J	CuNiSi	1									
	1–929963–0	1–962967–0	L	CuFe2	2	0.5–1.0 FLR	A: E = 2.6, G = 2.8, D_{Dr} = 1.1	A: H = 3.2, K = 3.4, D = 1.8	1.0mm² = 1.45; 0.75mm² = 1.36; 0.5mm² = 1.27	MQC–Applicator 2–878481–2	734285–1	3	4.5	7
	6 929963–9	962967–9	L		3									
	929963–8	962967–8	L	CuNiSi	2									
	6 929963–7	962967–7	L		3									
	6 929963–4	962967–4	L	CuFe2	1									
	929963–1	962967–1	L	CuNiSi	1									
	6 1–929962–0	1–962966–0	J	CuFe2	2	0.2–0.4 FLR	A: E = 2.1, G = 2.1, D_{Dr} = 0.8	A: H = 2.5, K = 2.5, D = 1.4	0.35mm² = 1.11; 0.25mm² = 1.07; 0.2mm² = 1.05	MQC–Applicator 2–878480–2	734285–1	3	4.5	7
	6 929962–9	962966–9	J		3									
	6 929962–8	962966–8	J	CuNiSi	2									
	6 929962–7	962966–7	J		3									
	6 929962–4	962966–4	J	CuFe2	1									
	929962–1	962966–1	J	CuNiSi	1									

TE CONNECTIVITY ORDER–Nr. SINGLE SEAL Einzeldichtung	TE CONNECTIVITY ORDER–Nr. DEAD END PLUG Blindstopfen
828921–1	828922–1
828920–1	828922–1
828920–1	828922–1

REMARKS
Bemerkungen

1. PRE TINNED 1–2µm
   vorverzinnt

2. ZONE "A": MIN 0.8µm ELECTROPL. Au OVER MIN 1.3µm ELECTROPL. Ni LAYER
   min 0.8µm galv. Au über min 1.3µm galv. Ni
   ZONE "B": 1–2µm ELECTROPL. Sn OVER MIN 0.1µm ELECTROPL. Ni
   1–2µm galv. Sn über min 0.1µm galv. Ni
   REST: min 0.1µm ELECTROPL. Ni
   min 0.1µm galv. Ni

3. ZONE "A": MIN 3µm ELECTROPL. Ag
   min 3µm galv. Ag
   REST: min 0.5µm ELECTROPL. Ag
   min 0.5µm galv. Ag

4. ZONE "A": MIN 3µm ELECTROPL. Ag
   min 3µm galv. Ag
   ZONE "B": 1–3µm ELECTROPL. Sn
   1–3µm galv. Sn
   REST: SILVER OR TIN ALLOWED IN TRANSITION AREAS.OVERLAPPING LAYERS AND PLAIN SURFACES ARE NOT ALLOWED.
   Silber oder Zinn im übergangsbereich erlaubt.
   überlagernde Schichten oder blanke Stellen sind nicht erlaubt.

5. AT AREA OF TOP OPENING PERMITTED
   Im Bereich der Spitze Öffnung zulässig

6. AVAILABILITY MUST BE CHECKED BY TE CONNECTIVITY
   Verfügbarkeit ist von TE CONNECTIVITY zu prüfen

THIS DRAWING IS A CONTROLLED DOCUMENT.
DIESE ZEICHNUNG IST EIN KONTROLLIERTES DOKUMENT.

DIMENSIONS: DIMENSIONEN mm
TOLERANCES UNLESS OTHERWISE SPECIFIED: ALLGEMEINTOLERANZEN ± ISO 8015
0 PLC ± 0.15 mm
1 PLC ± –
2 PLC ± –
3 PLC ± –
4 PLC ± –
ANGLES / WINKEL ± 1.5°
MATERIAL: SEE TABLE
FINISH / OBERFLAECHE/FARBE: SEE TABLE

DWN 25–JUN–2001 C. Goetz
CHK 25–JUN–2001 J. Granzow
APVD –
PRODUCT SPEC PRODUKTSPEZ 108–18027
APPLICATION SPEC VERARBEITUNGSSPEZ 114–18020
WEIGHT GEWICHT 0.85 g

TE Connectivity

NAME: DIA. 2.5MM PIN CONTACT
DIA 2.5mm Stiftkontakt

SIZE A1 | CAGE CODE 00779 | DRAWING NO ZEICHNUNGS–NR. C–1355064 | RESTRICTED TO NUR FUER –

CUSTOMER DRAWING / KUNDENZEICHNUNG | SCALE MASSSTAB 5:1 | SHEET BLATT 1 OF VON 1 | REV A4

4805 (3/11)

X-ON Electronics

Largest Supplier of Electrical and Electronic Components

Click to view similar products for Automotive Connectors ***category:***

Click to view products by TE Connectivity ***manufacturer:***

Other Similar products are found below :

003-018-000 60403001 60993906-B M902-2131 M902-2161 72.330.1035.1 73.353.4028.0 F119300-B F166900 F258300-B F358300-B F407400 F444110 F487000 F509500B-B 827153-1 8N1515-32-24P 9-1326729-8 925474-1 928905-1 964562-4 968782-1 GT17SA-8DS-HU 98891-1012 98947-1016 12004147 12004475-L 12010290 12010309-B 12015454 12020219-B 12020308 12041318-B 12052225-L 12052466 12059125 12064869 12004327-B 12010503-B 12015308 12015384 12015909 1-21030-1 12041254 12041318 12047946-B 12047957 12047957-L 12059473 12066261