THIS DRAWING IS UNPUBLISHED. RELEASED FOR PUBLICATION 20
© COPYRIGHT 20 BY TYCO ELECTRONICS CORPORATION ALL RIGHTS RESERVED.

LOC	DIST
HV	00

REVISIONS

P	LTR	DESCRIPTION	DATE	DWN	APVD
	A	NEW DRAWING	09AUG2013	DR	DR

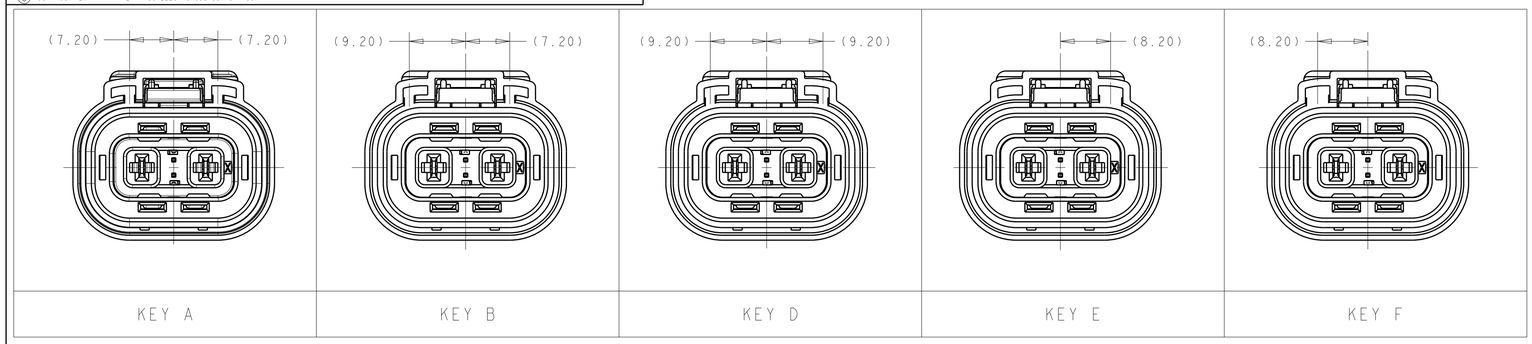

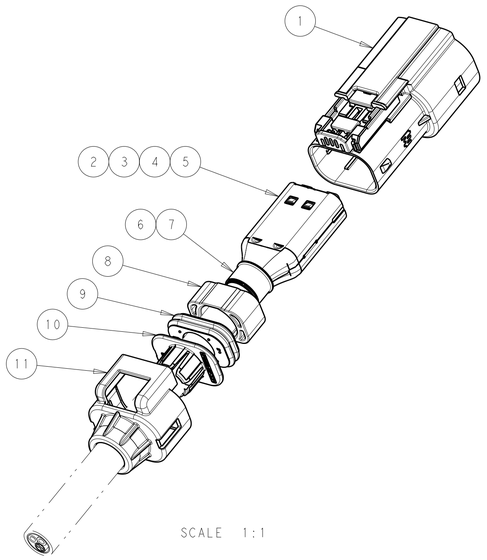

SCALE 1:1

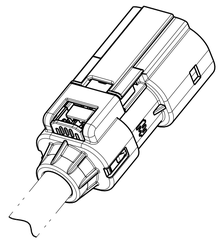

SCALE 1:1

1. ALL TERMINALS MUST BE FULLY SEATED AND LOCKED IN POSITION
2. INNER HOUSING MUST BE FULLY LOCKED 4 PLACES
3. CABLE SEAL RETAINER MUST BE FULLY LOCKED 2 PLACES
4. PARTS ARE NOT AVAILABLE BY THESE NUMBERS FULLY ASSEMBLED AS SHOWN. FINAL ASSEMBLY REQUIRES INDIVIDUAL COMPONENTS OR SUB-ASSEMBLIES LISTED IN THE PARTS LIST AND AVAILABLE SEPARATELY FROM TE. CONSULT INDIVIDUAL CUSTOMER DRAWINGS FOR PART RELEASE STATUS.
5. NOTE DELETED
6. VALIDATED CABLE / SUBCOMPONENT COMBINATION
7. MATES WITH Ag SHIELD HEADERS SHOWN ON TE DRAWING 2103124

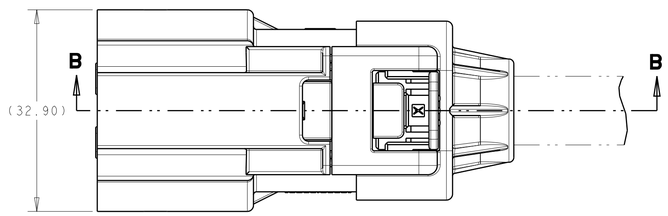

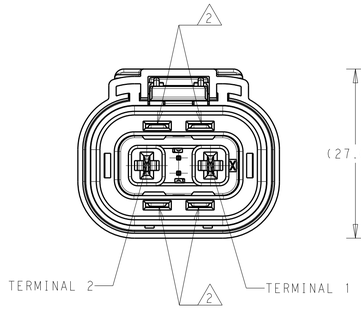

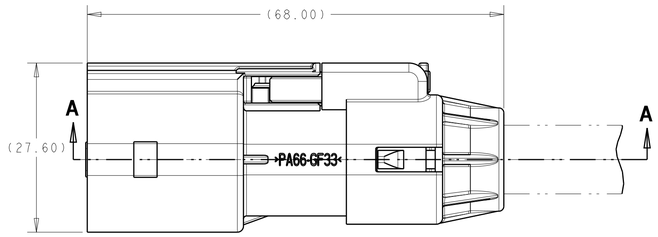

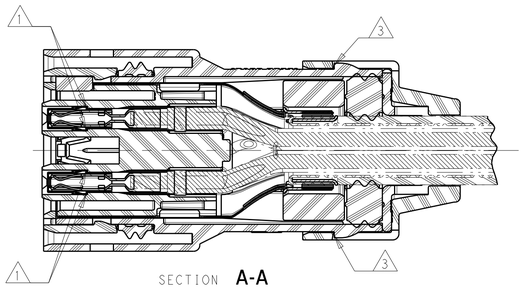

SECTION A-A

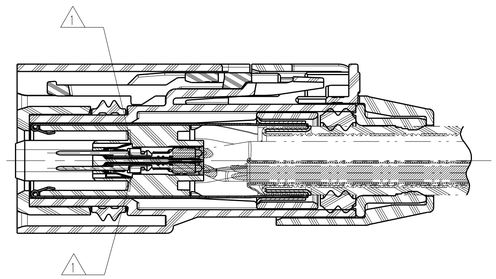

SECTION B-B

1	1	1	1	1	2103013-1	SEAL RETAINER, CABLE, SIZE 1	11
1	1	1	1	1	2103155-1	COLLET, SIZE 1	10
1	1	1	1	1	2103154-1	SEAL, CABLE, SIZE 1	9
1	1	1	1	1	2103153-1	SPACER	8
1	1	1	1	1	1587724-3	FERRULE, OUTER, SIZE C	7
1	1	1	1	1	1587723-3	FERRULE, INNER, SIZE C	6
2	2	2	2	2	1-2103157-1	SHIELD, PLUG, Ag, SIZE 1	5
2	2	2	2	2	1-968853-3	MCP 2.8 TERMINAL FEMALE, Ag, >2.5-4.0mm^2	4
2	2	2	2	2	963716-2	MQS 0.63 TERMINAL MALE, Au, 0.50-0.75mm^2	3
1	1	1	1	1	1587977-2	INNER HOUSING, PASS THRU HVIL	2
1	—	—	—	—	4-2103015-6	PLUG SUBASSY, KEY F, FINGER LATCH, WITH CPA	1
—	1	—	—	—	4-2103015-5	PLUG SUBASSY, KEY E, FINGER LATCH, WITH CPA	1
—	—	1	—	—	4-2103015-4	PLUG SUBASSY, KEY D, FINGER LATCH, WITH CPA	1
—	—	—	1	—	4-2103015-2	PLUG SUBASSY, KEY B, FINGER LATCH, WITH CPA	1
—	—	—	—	1	4-2103015-1	PLUG SUBASSY, KEY A, FINGER LATCH, WITH CPA	1
					PART NUMBER	DESCRIPTION	ITEM
F	E	D	B	A	ASSEMBLY INDEX		
2103436-6	2103436-5	2103436-4	2103436-2	2103436-1	REFERENCE NUMBER 4 THESE NUMBERS ARE FOR REFERENCE PURPOSE ONLY AND ARE NOT FOR SALE		
QUANTITY REQUIRED					PARTS LIST		
KROMBERG & SCHUBERT 64994093 6					CABLE SUPPLIER/ SPECIFICATION		
2x4.0mm^2 + 2x0.5mm^2					CABLE SIZE		

THIS DRAWING IS A CONTROLLED DOCUMENT.

DIMENSIONS: mm

TOLERANCES UNLESS OTHERWISE SPECIFIED: ±0.50; PLC ±; 1 PLC ±; 2 PLC ±; 3 PLC ±; 4 PLC ±; ANGLES ±1°

MATERIAL

FINISH

DWN	D. RHEIN	09NOV2010
CHK	D. RHEIN	02DEC2010
APVD	J. BOLEWITZ	02DEC2010

PRODUCT SPEC: 108-32020

APPLICATION SPEC: 114-13310

WEIGHT

CUSTOMER DRAWING

TE Connectivity

NAME: PLUG ASSEMBLY, PASS THRU HVIL, HVA280-2PHM, REFERENCE DRAWING

SIZE	CAGE CODE	DRAWING NO	RESTRICTED TO
A1	00779	C-2103436	

SCALE	SHEET	OF	REV
2:1	1	1	A

4805 (3/11)

X-ON Electronics

Largest Supplier of Electrical and Electronic Components

Click to view similar products for Automotive Connectors ***category:***

Click to view products by TE Connectivity ***manufacturer:***

Other Similar products are found below :

003-018-000 60403001 60993906-B M902-2131 M902-2161 72.330.1035.1 73.353.4028.0 F119300-B F166900 F258300-B F358300-B F407400 F444110 F487000 F509500B-B 827153-1 8N1515-32-24P 9-1326729-8 925474-1 928905-1 964562-4 968782-1 GT17SA-8DS-HU 98891-1012 98947-1016 12004147 12004475-L 12010290 12010309-B 12015454 12020219-B 12020308 12041318-B 12052225-L 12052466 12059125 12064869 12004327-B 12010503-B 12015308 12015384 12015909 1-21030-1 12041254 12041318 12047946-B 12047957 12047957-L 12059473 12066261