sales@trfastenings.com
www.trfastenings.com

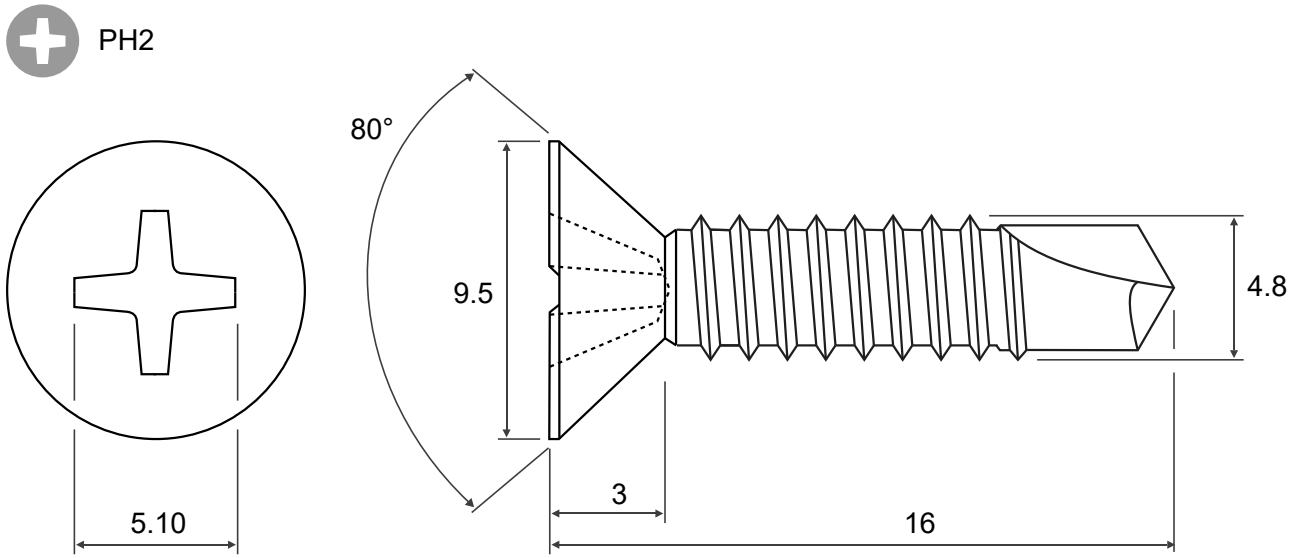

	Material		Customer Part No.	
	Finish		Web Ref No	

© TR FASTENINGS LTD. THIS DRAWING IS THE PROPERTY OF TR FASTENINGS AND IS SUPPLIED IN CONFIDENCE, AND MAY NOT WHOLLY OR PARTIALLY BE COPIED, WITHOUT THE EXPRESSED AUTHORISATION OF TR FASTENINGS LTD.

UNCONTROLLED COPY

X-ON Electronics

Largest Supplier of Electrical and Electronic Components

Click to view similar products for Screws & Fasteners ***category:***

Click to view products by TR Fastenings ***manufacturer:***

Other Similar products are found below :

5721-1440-1/4-SS 593503FX 0098.0094 0098.9206 0098.9219 0098.9221 0098.9262 59781-6 0098.9210 0098.9212 618-00001 6292-1 690432-1 699161-000 7230-3 72609-02 CAPTIVE JACK SCREW 73542-02 CAPTIVE SHORT THUMBSCREW 745564-1 7680 809704-1 8700 8860220 9521 992763-3 1-18024-0 A168P1 1-24921-1 125416-1 1301810148 1301810313 1301810400 1301830031 1-306131-6 1301810131 1301830042 1393160-3 1458 1-59781-3 18029-4 NBX-10953 2079764-1 20993.45098 21004-1 21009-4 21014-5 21021-2 CA24037A01 22987-4 2-305927-7 2327