Specification for Approval

Customer : 深圳市嘉立創科技發展有限公司

Product Name: **LEAD-FREE THICK FILM CHIP RESISTORS**

Part Name : **CHIP SERIES ±0.5%, ±1%, ±2%, ±5% & 0Ω**

21 XIAJIA NORTH ROAD, ECONOMIC AND TECHNICAL DEVELOPMENT ZONE, KUNSHAN CITY, JIANGSU, CHINA 215334
TEL: 86 512 57631411 / 22 / 33
FAX: 86 512 57631431
E-mail: globalsales@uniohm.com localsales@uniohm.com

Approved	Checked	Prepared	File NO.	Edition	Date	Page
William Zhao	Apple Liu	Tang chengxia	JL-01-002	1	2014.2.11	1/14

Contents

Introduction ……Page

1.0 Scope ……4

2.0 Ratings & Dimension ……4~5

3.0 Structure……5

4.0 Marking……6~8

5.0 Derating Curve……8

6.0 Performance Specification ……9~10

7.0 Explanation of Part No. System ……10~11

8.0 Ordering Procedure ……11

9.0 Standard Packing ……12~13

10.0 Note Matter……14

File Name: CHIP SERIES ±0.5%,±1%,±2%,±5%& 0Ω	Date	2014.2.11	Edition No.	1

Amendment Record				Signature	
Edition	Prescription of amendment	Amend Page	Amend Date	Amended by	Checked by

1.0 Scope:

This specification for approve relates to the Lead-Free Thick Film Chip Resistors manufactured by UNIOHM.

2.0 Ratings & Dimension:

01005、0201、0402	0603、0805、1206、1210、1812、2010、2512
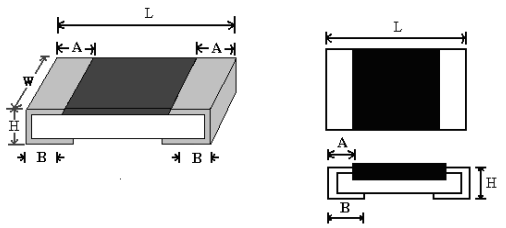	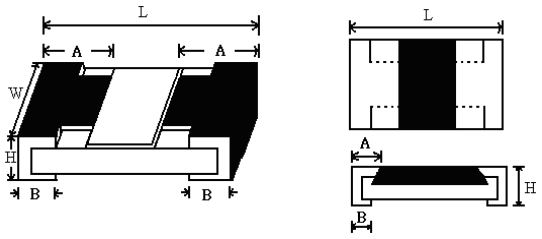

2.1 Dimension & Resistance Range：

Type	70℃ Power	Dimension(mm)					Resistance Range			
		L	W	H	A	B	0.5%	1.0%	2.0%	5.0%
01005	1/32W	0.40±0.02	0.20±0.02	0.13±0.02	0.10±0.05	0.10±0.03	--	10Ω-10MΩ	10Ω-10MΩ	10Ω-10MΩ
0201	1/20W	0.60±0.03	0.30±0.03	0.23±0.03	0.10±0.05	0.15±0.05	--	1Ω-10MΩ	1Ω-10MΩ	1Ω-10MΩ
0402	1/16W	1.00±0.10	0.50±0.05	0.35±0.05	0.20±0.10	0.25±0.10	1Ω-10MΩ	0.2Ω~22MΩ	0.2Ω~22MΩ	0.2Ω~22MΩ
0603	1/10W	1.60±0.10	0.80±0.10	0.45±0.10	0.30±0.20	0.30±0.20	1Ω-10MΩ	0.1Ω~33MΩ	0.1Ω~33MΩ	0.1Ω~100MΩ
0805	1/8W	2.00±0.15	1.25 +0.15 -0.10	0.55±0.10	0.40±0.20	0.40±0.20	1Ω-10MΩ	0.1Ω~33MΩ	0.1Ω~33MΩ	0.1Ω~100MΩ
1206	1/4W	3.10±0.15	1.55 +0.15 -0.10	0.55±0.10	0.45±0.20	0.45±0.20	1Ω-10MΩ	0.1Ω~33MΩ	0.1Ω~33MΩ	0.1Ω~100MΩ
1210	1/3W 1/2W	3.10±0.10	2.60±0.20	0.55±0.10	0.50±0.25	0.50±0.20	1Ω-10MΩ	0.1Ω~10MΩ	0.1Ω~22MΩ	0.1Ω~100MΩ
1812	1/2W 3/4W-S	4.50±0.20	3.20±0.20	0.55±0.20	0.50±0.20	0.50±0.20	1Ω-10MΩ	0.11Ω-10MΩ	0.1Ω-10MΩ	0.1Ω-10MΩ
2010	1/2W 3/4W-S	5.00±0.10	2.50±0.20	0.55±0.10	0.60±0.25	0.50±0.20	1Ω-10MΩ	0.1Ω~22MΩ	0.1Ω~22MΩ	0.1Ω~22MΩ
2512	1W	6.35±0.10	3.20±0.20	0.55±0.10	0.60±0.25	0.50±0.20	1Ω-10MΩ	0.1Ω~33MΩ	0.1Ω~33MΩ	0.1Ω~33MΩ

2.2 Ratings

Type	70℃ Power	Max。Working Voltage	Max。Overload Voltage	Dielectric withstanding Voltage	Resistance Value of Jumper	Rated Current of Jumper	Max。Rated Current of Jumper	Operating Temperature
01005	1/32W	15V	30V	--	<50mΩ	--	--	-55℃~155℃
0201	1/20W	25V	50V	--	<50mΩ	0.5A	1A	-55℃~155℃
0402	1/16W	50V	100V	100V	<50mΩ	1A	2A	-55℃~155℃
0603	1/10W	50V	100V	300V	<50mΩ	1A	2A	-55℃~155℃
0805	1/8W	150V	300V	500V	<50mΩ	2A	5A	-55℃~155℃
1206	1/4W	200V	400V	500V	<50mΩ	2A	10A	-55℃~155℃
1210	1/3W 1/2W	200V	500V	500V	<50mΩ	2A	10A	-55℃~155℃
1812	1/2W 3/4W-S	200V	500V	500V	<50mΩ	2A	10A	-55℃~155℃
2010	1/2W 3/4W-S	200V	500V	500V	<50mΩ	2A	10A	-55℃~155℃
2512	1W	200V	500V	500V	<50mΩ	2A	10A	-55℃~155℃

3.0 Structure:

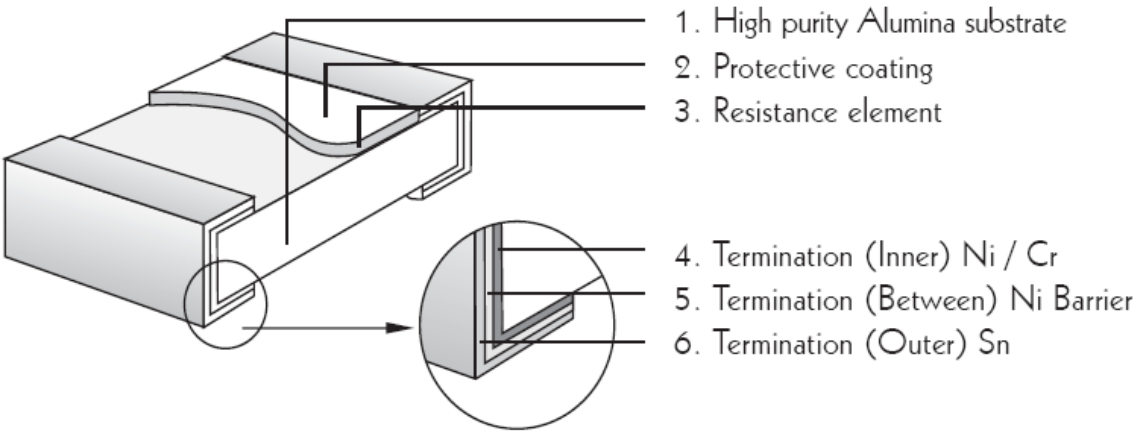

4.0 Marking:

(1) For 01005、0201 and 0402 size. Due to the very small size of the resistor's body, there is no marking on the body.

Example:

01005、0201、0402

(2) ±2%,±5%Tolerance:The first two digits are significant figures of resistance and the third denotes number of zeros following

Example:

33000 → 33KΩ

(3) ±2%、±5%Tolerance: Below 10Ω show as following, read alphabet"R" as decimal point.

Example:

2R2 → 2.2Ω

(4) ±0.5%、±1% Tolerance: 4 digits, first three digits are significant; forth digit is number of zeros. Letter r is decimal point.

2701 → 2.7KΩ

10R0 → 10Ω

(5) standard E-24 and not belong to E-96 series values(in ±0.5%、±1%tolerance)of 0603 size the marking is the same as 5% tolerance but marking as underline

333=33000→33KΩ

680→68Ω

(6) Product below 1Ω,show as following, the first digit is "R" which as decimal point.

R30→0.3Ω

(7) Standard E-96 series values (±0.5%、±1% tolerance) of 0603 size. Due the small size of the resistor's body, 3 digits marking will be used to indicate the accurate resistance value by using the following multiplier & resistance code.

Multiplier code:

Code	A	B	C	D	E	F	G	H	X	Y	Z
Multiplier	10^0	10^1	10^2	10^3	10^4	10^5	10^6	10^7	10^{-1}	10^{-2}	10^{-3}

Coding formula

First two digits----------Resistance code Third digit----------Multiplier code

EXAMPLE: 1.96KΩ=196×10^1Ω------29B 12.4Ω=124×10^{-1}Ω-----10X

STANDARD E-96 VALUES AND 0603 RESISTANCE CODE

Ω VALUE	CODE	Ω VALUE	CODE	Ω VALUE	CODE	Ω VALUE	CODE
100	01	178	25	316	49	562	73
102	02	182	26	324	50	576	74
105	03	187	27	332	51	590	75
107	04	191	28	340	52	604	76
110	05	196	29	348	53	619	77
113	06	200	30	357	54	634	78
115	07	205	31	365	55	649	79
118	08	210	32	374	56	665	80
121	09	215	33	383	57	681	81
124	10	221	34	392	58	698	82
127	11	226	35	402	59	715	83
130	12	232	36	412	60	732	84
133	13	237	37	422	61	750	85
137	14	243	38	432	62	768	86
140	15	249	39	442	63	787	87
143	16	255	40	453	64	806	88
147	17	261	41	464	65	825	89
150	18	267	42	475	66	845	90
154	19	274	43	487	67	866	91
158	20	280	44	499	68	887	92
162	21	287	45	511	69	909	93
165	22	294	46	523	70	931	94
169	23	301	47	536	71	953	95
174	24	309	48	549	72	976	96

(8) 0Ω Marking:

Normally for 01005、0201 and 0402 size, no marking on the body:

Normally, the making of 0Ω 0603, 0Ω 0805, 0Ω 1206, 0Ω 1210, 0Ω 1812, 0Ω 2010, 0Ω 2512 resistors as following

5.0 Derating Curve:

Resistors shall have a power rating based on continuous load operation at an ambient temperature from -55℃ to 70℃. For temperature in excess of 70℃, the load shall be derate as shown in figure 1

Figure 1

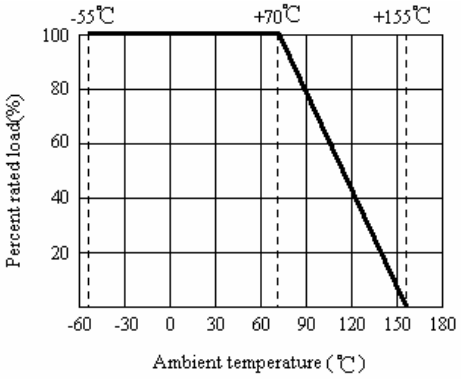

5.1 Voltage rating:

Resistors shall have a rated direct-current (DC) continuous working

Voltage or an approximate sine-wave root-mean-square (RMS) alternating-current (AC) continuous working voltage at commercial-line frequency and waveform corresponding to the power rating, as determined from the following formula:

$$RCWV = \sqrt{P \times R}$$

Where: RCWV commercial-line frequency and waveform (Volt.)

P = power rating (WATT.) R = nominal resistance (OHM)

In no case shall the rated DC or RMS AC continuous working voltage be greater than the applicable maximum value.

The overload voltage is 2.5 times RCWV or Max. Overload voltage whichever is less.

6.0 Performance Specification:

Characteristic	Limits		Test Method (JIS-C-5201& JIS-C-5202)
◎Temperature Coefficient	**01005:** 10Ω≦ R ≤100Ω: ±400PPM/℃ >100Ω: ±250PPM/℃ **0201:** 1Ω≦ R ≤10Ω: ±400PPM/℃ >10Ω:±200PPM/℃ **0402~2512 :** ＜1Ω ≤±800PPM/°C 1Ω≦ R ≤10Ω ≤±400PPM/°C 10Ω< R ≦100Ω ≤±200PPM/°C 100Ω<R<10MΩ ≤±100PPM/°C 10MΩ≦R<100MΩ≤±200PPM/°C		4.8 Natural resistance changes per temp. Degree centigrade $\frac{R_2-R_1}{R_1(T_2-T_1)} \times 10^6$ (PPM/℃) R_1: resistance value at room temp. (T_1) R_2: resistance value at room temp. +100℃ (T_2) Test pattern: room temp. (T_1), room temp. +100℃(T_2)
◎ *Short-time overload	±0.5%,±1%	±(1%+0.1Ω) Max.	4.13 Permanent resistance change after the application of a potential of 2.5 times RCWV or Max. Overload Voltage whichever less for 5 seconds..
	±2%,±5%	±(2%+0.1Ω) Max.	
	01005	±(2%+0.1Ω) Max	
	* <50mΩ		Apply max Overload current for 0Ω
* Dielectric withstanding voltage	No evidence of flashover mechanical damage, arcing or insulation breaks down.		4.7 Resistors shall be clamped in the trough of a 90℃ metallic v-block and shall be tested at ac potential respectively specified in the given list of each product type for 60-70 seconds.
◎ *Solderability	95% coverage Min.		Wave solder: Test temperature of solder: 245℃±3℃ dipping time in solder: 2-3 seconds.
	Go up tin rate bigger than half of end pole		Reflow: 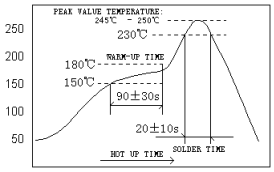
◎ Temperature cycling	±0.5%,±1%	±(0.5%+0.05 Ω)Max	4.19Resistance change after continuous five cycles for duty cycle specified below:
	±2%,±5%	±(1.0%+0.05 Ω) Max	
	01005	±(1%+0.05Ω) Max	
◎ Soldering heat	Resistance change rate is: ±(1%+0.05Ω) Max		4.18 Dip the resistor into a solder bath having a temperature of 260℃±5℃ and hold it for 10±1 seconds.

Step	Temperature	Time
1	-55℃±3℃	30 mins
2	Room temp.	10 --- 15 mins
3	+155℃±2℃	30 mins
4	Room temp.	10 --- 15 mins

Terminal bending	±(1%+0.05Ω) Max		4.33 Twist of test board: Y/x = 3/90 mm for 60Seconds
* Insulation resistance	1,000 MΩ or more		4.6 the measuring voltage shall be ,measured with a direct voltage of (100±15)V or a voltage equal to the dielectric withstanding voltage., and apply for 1min
◎ Humidity (steady state)	±0.5%,±1%	±(0.5%+0.1Ω) Max.	4.24Temporary resistance change after 240 hours exposure in a humidity test chamber controlled at 40±2℃ and 90-95% relative humidity,
	±2%,±5%	±(3.0%+0.1Ω) Max.	
	01005	±(3.0%+0.05Ω) Max.	
◎ *Load life in humidity	±0.5%,±1%	±(1%+0.1Ω)max.	7.9 Resistance change after 1,000 hours (1.5 hours "ON",0.5 hour "OFF") at RCWV in a humidity chamber controlled at 40℃±2℃ and 90 to 95% relative humidity.
	±2%,±5%	±(3%+0.1Ω)Max.	
	01005	±(3.0%+0.05Ω) Max.	
	* <50mΩ		Apply to rated current for 0Ω
◎ *Load life	±0.5%,±1%	±(1%+0.1Ω)Max.	4.25.1 Permanent resistance change after 1,000 hours operating at RCWV with duty cycle 1.5 hours "ON", 0.5 hour "OFF" at 70℃±2℃ ambient.
	±2%,±5%	±(3%+0.1Ω)Max	
	01005	±(3.0%+0.05Ω) Max.	
	* <50mΩ		Apply to rated current for 0Ω
The resistors of 0Ω only can do the characteristic noted of * The resistors of 01005 & 0201 only can do the characteristic noted of ◎			

7.0 Explanation of Part No. System:

The standard Part No. includes 14 digits with the following explanation:

7.1 1st ~4th digits

This is to indicate the Chip Resistor.

Example: 01005, 0201, 0402, 0603,0805,1206,1210,2010,1812,2512

7.2 5th~6th digits:

7.2.1 This is to indicate the wattage or power rating. To dieting the size and the numbers, The following codes are used; and please refer to the following chart for detail:

W=Normal Size; S=Small Size; U= Ultra Small Size; "1" ~ "G" to denotes "1" ~ "16" as Hexadecimal:

1/16W~1W:

Wattage	1/32	3/4W	1/2	1/3	1/4	1/8	1/10	1/16	1/20W	1
Normal Size	WH	07	W2	W3	W4	W8	WA	WG	WM	1W
Small Size	/	07	S2	S3	S4	S8	SA	SG	/	1S
Ultra Small Size	/	/	U2	U3	U4	U8	UA	UG	/	1U

7.2.2 For power rating less or equal to 1 watt, the 5th digit will be the letters W or S to represent the size required & the 6th digit will be a number or a letter code.

Example: WA=1/10W; S4=1/4W-S

7.3 The 7th digit is to denote the Resistance Tolerance. The following letter code is to be used for indicating the standard Resistance Tolerance.

D=±0.5% F=±1% G=±2% J=±5% K= ±10%

7.4 The 8th to 11th digits is to denote the Resistance Value.

7.4.1 For the standard resistance values of 5%&10% series, the 8th digit is "0", the 9th & 10th digits are to denote the significant figures of the resistance and the 11th digit is the number of zeros following;

For the standard resistance values of ≤2% series in, the 8th digit to the 10th digits is to denote the significant figures of the resistance and the 11th digit is the zeros following.

7.4.2 The following number s and the letter codes are to be used to indicate the number of zeros in the 11th digit:

$0=10^0$ $1=10^1$ $2=10^2$ $3=10^3$ $4=10^4$ $5=10^5$ $6=10^6$ $J=10^{-1}$ $K=10^{-2}$ $L=10^{-3}$ $M=10^{-4}$

7.4.3 The 12th, 13th & 14th digits.

The 12th digit is to denote the Packaging Type with the following codes:

C=Bulk in (Chip Product) T=Tape/Reel

7.4.4 The 13th digit is normally to indicate the Packing Quantity of Tape/Reel packaging types. The following letter code is to be used for some packing quantities:

4=4000pcs 5=5000pcs C=10000pcs D=20000pcs E=15000pcs

Chip Product: BD=B/B-20000pcs TC=T/R-10000pcs

7.4.5 For some items, the 14th digit alone can use to denote special features of additional information with the following codes:

"*" = the internal series general character (usually shown with A, B, C etc.)

8.0 Ordering Procedure: (Example: 1210 1/2W ±1% 22Ω T/R-5000)

1 2 1 0 W 2 F 2 2 0 J T 5 *

Product Type:
Digits with chip resistor types as follows:
0105=01005
0201
0402
0603
0805
1206
1210
1812
2010
2512

Wattage:
Normal size:
WH=1/32W
WM=1/20W
WG=1/16W
WA=1/10W
W8=1/8W
W4=1/4W
W2=1/2W
07=3/4W
1W=1W
Small size:
SA=1/10WS
S8=1/8WS
S4=1/4W-S
U2=1/2WSS
S2=1/2W-S
07=3/4W-S

Tolerance:
D=±0.5% F=±1%
G=±2% J=±5%

Resistance Value:
5% series:
The 1st digit will be "0" ;the2nd & 3rd digits are for the significant figures of the resistance and the 4th digit indicate the numbers of zeros following.
0.5%、1%、2%series:
The 1st to 3rd digits are for the significant figures of the resistance and 4th digit denotes number of zeros following.
$J=10^{-1}$; $K=10^{-2}$; $L=10^{-3}$

Packing Type:
T=Tape/Reel

Packing quantity:
1=1000PCS
2=2000PCS
3=3000PCS
4=4000PCS
5=5000PCS
C=10000PCS
D=20000PCS

Special Feature
"*" = the internal series general character (usually shown with A, B, C etc.)

9.0 Packaging:

9.1 Tapping Dimension:

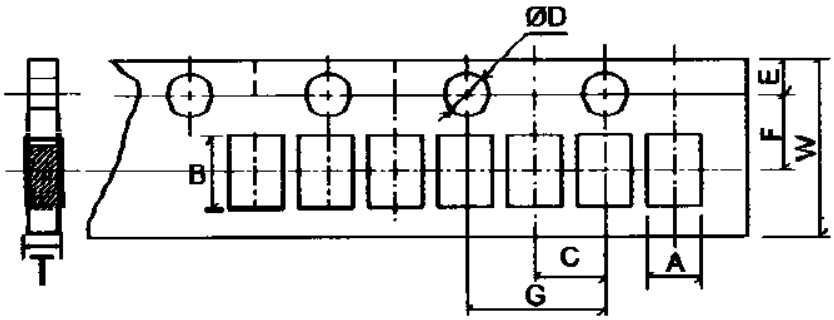

Unit: mm

Type	A	B	C±0.05	ΦD +0.1 -0	E±0.1	F±0.05	G±0.1	W±0.2	T±0.1
01005	0.24±0.05	0.45±0.05	2.00	1.50	1.75	3.50	4.00	8.00	0.40
0201	0.40±0.05	0.70±0.05	2.00	1.50	1.75	3.50	4.00	8.00	0.42
0402	0.65±0.20	1.15±0.20	2.00	1.50	1.75	3.50	4.00	8.00	0.45

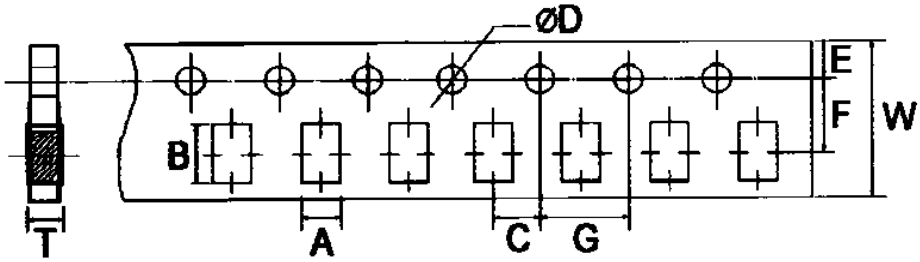

Unit: mm

Type	A ±0.2	B ±0.2	C±0.05	ΦD +0.1 -0	E±0.1	F±0.05	G±0.1	W±0.2	T±0.1
0603	1.10	1.90	2.00	1.50	1.75	3.50	4.00	8.00	0.67
0805	1.65	2.40	2.00	1.50	1.75	3.50	4.00	8.00	0.81
1206	2.00	3.60	2.00	1.50	1.75	3.50	4.00	8.00	0.81
1210	2.80	3.50	2.00	1.50	1.75	3.50	4.00	8.00	0.75
2010	2.80	5.40	2.00	1.50	1.75	5.50	4.00	12.00	0.75

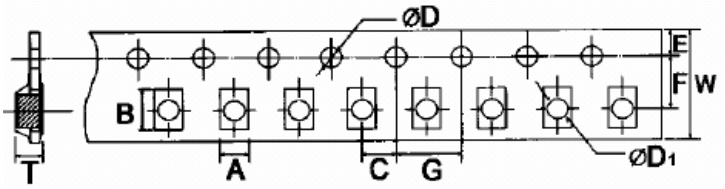

Unit: mm

Type	A±0.2	B±0.2	C±0.05	$\phi D^{+0.1}_{-0}$	$\phi D1^{+0.25}_{-0}$	E±0.1	F±0.05	G±0.1	W±0.2	T±0.1
1812	3.50	4.80	2.00	1.50	1.50	1.75	5.50	4.00	12.00	1.00
2512	3.50	6.70	2.00	1.50	1.50	1.75	5.50	4.00	12.00	1.00

9.2 Dimension:

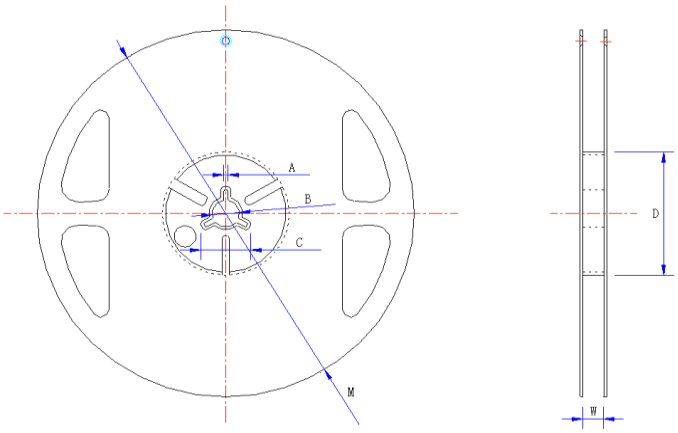

Unit: mm

Type	Taping	Qty/Reel	A±0.5	B±0.5	C±0.5	D±1	M±2	W±1
01005	Paper	20,000pcs	2.0	13.0	21.0	60.0	178.0	10.0
0201	Paper	10,000pcs	2.0	13.0	21.0	60.0	178.0	10.0
0402	Paper	10,000pcs	2.0	13.0	21.0	60.0	178.0	10.0
0603	Paper	5,000pcs	2.0	13.0	21.0	60.0	178.0	10.0
0805	Paper	5,000pcs	2.0	13.0	21.0	60.0	178.0	10.0
1206	Paper	5,000pcs	2.0	13.0	21.0	60.0	178.0	10.0
1210	Paper	5,000pcs	2.0	13.0	21.0	60.0	178.0	10.0
2010	Paper or Embossed	4,000pcs	2.0	13.0	21.0	60.0	178.0	13.8
1812	Embossed	4,000pcs	2.0	13.0	21.0	60.0	178.0	13.8
2512	Embossed	4,000pcs	2.0	13.0	21.0	60.0	178.0	13.8

10.0: Note Matter：

10.1 UNIOHM recommend the storage condition temperature: 15℃~35℃, humidity :25%~75%.
(Put condition for individual product).
Even under UNIOHM recommended storage condition, solderability of products over 1 year old.
(Put condition for each product) may be degraded.

10.2 Store / transport cartons in the correct direction, which is indicated on a carton as a symbol.
Otherwise bent leads may occur due to excessive stress applied when dropping of a carton.

10.3 Product performance and soldered connections may deteriorate if the products are stored in the following places:

a. Storage in high Electrostatic.

b. Storage in direct sunshine、rain and snow or condensation.

c. Where the products are exposed to sea winds or corrosive gases, including Cl_2, H_2S_3 NH_3, SO_2, NO_2.

10.4 The products are used in circuit board thickness greater than 1.6mm. If customers use less than the thickness of the circuit board that you should confirm with the company, in order to recommend a more suitable product.

X-ON Electronics

Largest Supplier of Electrical and Electronic Components

Click to view similar products for Thick Film Resistors ***category:***

Click to view products by Uniroyal ***manufacturer:***

Other Similar products are found below :

MCR03EZPFX3162 MCR004YZPJ332 201007J022KT4E 201007F1653T4E 201007F6652T4E 0603WAF137KT5E RTT204702FTE RTT203000FTE RTT2056R0FTE CR2010F470KE04Z RTT018451FTH RTT021802DTH 0402WGF510LTCE 0201WMJ0200TEE TR0603B26K7P0550Z 0201WMF5102TEE 1210W2J047KT5E YLR12-2-4F-W HOT(0.25x1.3)-3.2-0R-I HOT(0.4x1.5)-5.2-0R-I HoT(0.45x1.5)-8.2-0R-I 0201WMF1103TEE 0201WMF7152TEE 1210W2J0124T5E 201007J010LT4E 201007J0360T4E 201007J0430T4E 0805W8F931KT5E 1206W4F5231T5E 1210W2J0620T5E 201007J0822T4E 0201WMF1005TCE 0201WMF1212TCE 0201WMF1373TCE 0201WMF1400TCE 0201WMF2000TEE 0201WMF2001TCE 0201WMF226JTCE 0201WMF2672TCE 0201WMF2803TCE 0201WMF357JTCE 0201WMF3743TCE 0201WMF430JTCE 0201WMF4990TCE 0201WMF5104TCE 0201WMF510JTEE 0201WMF5110TCE 0201WMF6652TEE 0201WMF6812TCE 0201WMF8200TCE