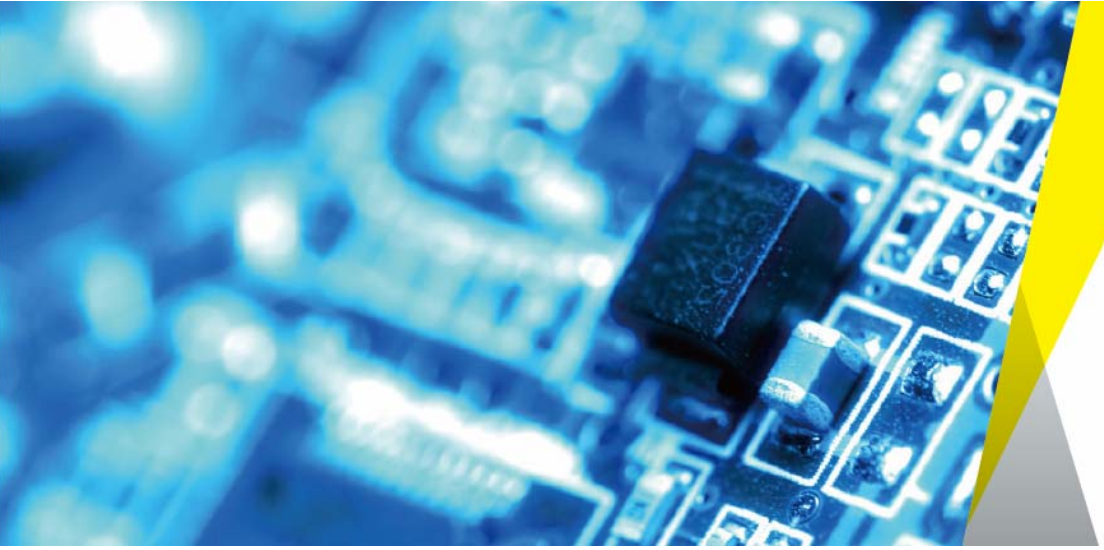

DATA SHEET

Product Name **Thick Film Chip Resistors**

Part Name **01005/0201/0402/0603/0805/1206/1210/1812/2010/2512 Series**

Uniroyal Electronics Global Co., Ltd.

88 Longteng Road, Economic & Technical Development Zone, Kunshan, Jiangsu, China

Tel +86 512 5763 1411 / 22 /33

Email marketing@uni-royal.cn

Manufacture Plant
Uniroyal Electronics Industry (kunshan) co., ltd.
Uniroyal Electronics Industry Co., Ltd.
Uniroyal Electronics Global Co.,Ltd Shenzhen Branch
Aeon Technology Corporation
Uniroyal Electronics Global Co.,Ltd Xiamen Branch
Kunshan Foss Electronic material Co., Ltd.
Royal Electronic Factory (thailand) co., ltd

Brands ***RoyalOhm*** ***UniOhm***

1. Scope

1.1 This specification for approve relates to the Thick Film Chip Resistors manufactured by UNI-ROYAL.
1.2 Small size & light weight.
1.3 Reduction of assembly costs and matching with placement machine.
1.4 Suitable for both wave & re-flow soldering.
1.5 Applications: Navigator (GPS), Mobile Phone,Telecom, PDA, Setbox, Meter.

2. Explanation of Part No. System

Part No. includes 14 codes shown as below:
2.1 1st~4th codes: Part name. E.g.: 01005, 0201, 0402, 0603, 0805, 1206 ,1210, 2010,1812, 2512.
2.2 5th~6th codes: Power rating.
E.g.: W=Normal Size "1~G" = "1~16"

Wattage	1/32	3/4	1/2	1/3	1/4	1/8	1/10	1/16	1/20	1
Normal Size	WH	07	W2	W3	W4	W8	WA	WG	WM	1W

If power rating is lower or equal than 1 watt, 5th code would be "W" and 6th code would be a number or letter.
E.g.: WA=1/10W W4=1/4W
2.3 7th code: Tolerance. E.g.: D=±0.5% F=±1% G=±2% J=±5%
2.4 8th~11th codes: Resistance Value.
2.4.1 If value belongs to standard value of ≥5% series, 8th code would be zero,9th~10th codes are significant figures of the resistance and 11th code is the power of ten.
2.4.2 If value belongs to standard value of ≤2% series, 8th~10th codes are significant figures of the resistance, and 11th code is the power of ten.
2.4.3 11th codes listed as following:
$0=10^0$ $1=10^1$ $2=10^2$ $3=10^3$ $4=10^4$ $5=10^5$ $6=10^6$ $J=10^{-1}$ $K=10^{-2}$ $L=10^{-3}$ $M=10^{-4}$ $N=10^{-5}$ $P=10^{-6}$
2.5 12th~14th codes.
2.5.1 12th code: Packaging Type. E.g.: C=Bulk T=Tape/Reel
2.5.2 13th code: Standard Packing Quantity.
4=4000pcs 5=5000pcs C=10000pcs D=20000pcs E=15000pcs
Chip Product: BD=B/B-20000pcs TC=T/R-10000pcs
2.5.3 14th code: Special features.
E = Environmental Protection, Lead Free, or Standard type.

3. Ordering Procedure

(Example: 0805 1/8W ±5% 10KΩ T/R-5000)

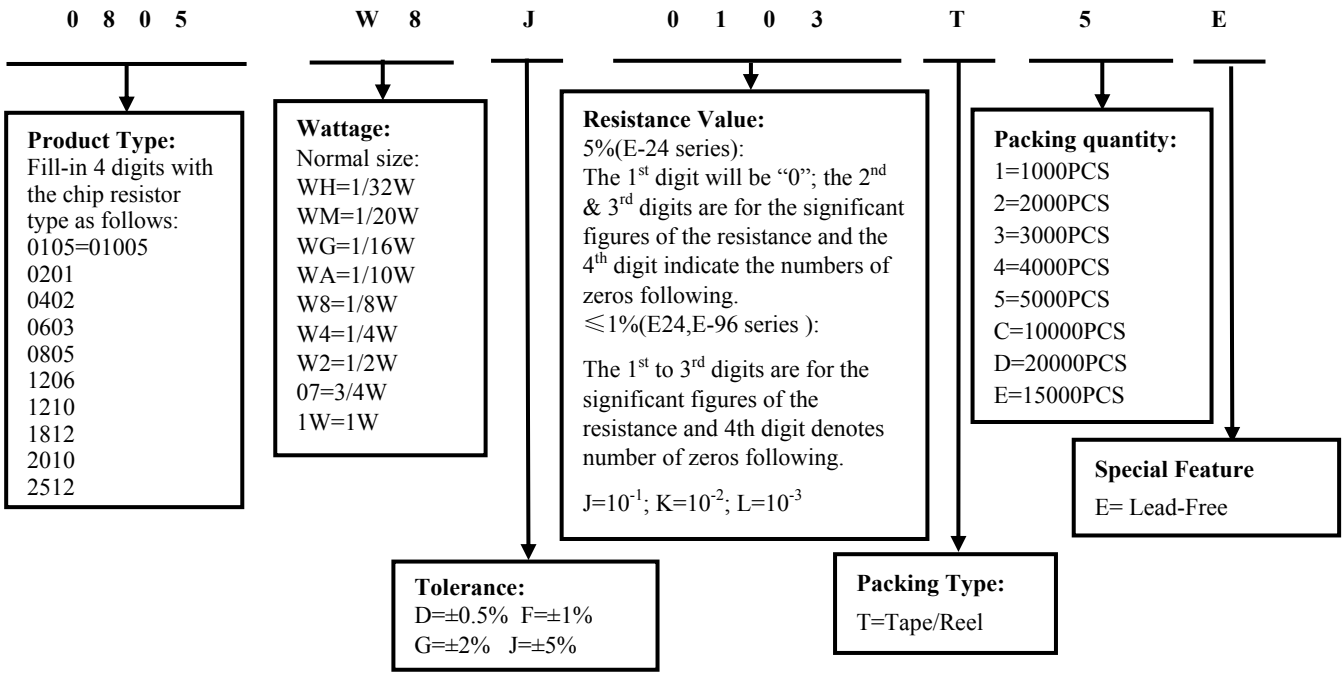

4. Marking

(1) For 01005、0201 and 0402 size. Due to the very 01005、0201、0402 small size of the resistor's body, there is no marking on the body.

(2)Normally, the making of 0Ω 0603, 0Ω 0805, 0Ω 1206, 0Ω 1210, 0Ω 1812, 0Ω 2010, 0Ω 2512 resistors as following

0 → 0Ω

(3) ±2%,±5%Tolerance:The first two digits are significant figures of resistance and the third denotes number of zeros following

333 → 33KΩ

(4) ±0.5%、±1% Tolerance: 4 digits, first three digits are significant; forth digit is number of zeros. Letter r is decimal point.

2701 → 2.7KΩ

(5) More than 0805 specifications (including) 4 digits, Product below 1Ω, show as following, the first digit Is "R" which as decimal point.

R300 → 0.3Ω

(6) Standard E-96 series values of 0603 ≤1% : due to the small size of the resistor's body, 3 digits marking will be used to indicate the accurate resistance value by using the following multiplier & resistance code.

Multiplier Code (for 0603 ≤±1% marking)

Code	A	B	C	D	E	F	G	H	X	Y	Z
Multiplier	10^0	10^1	10^2	10^3	10^4	10^5	10^6	10^7	10^{-1}	10^{-2}	10^{-3}

Standard E-96 series Resistance Value code (for 0603≤±1% marking)

Value	Code	Value	Code	Value	Code	Value	Code
100	01	178	25	316	49	562	73
102	02	182	26	324	50	576	74
105	03	187	27	332	51	590	75
107	04	191	28	340	52	604	76
110	05	196	29	348	53	619	77
113	06	200	30	357	54	634	78
115	07	205	31	365	55	649	79
118	08	210	32	374	56	665	80
121	09	215	33	383	57	681	81
124	10	221	34	392	58	698	82
127	11	226	35	402	59	715	83
130	12	232	36	412	60	732	84
133	13	237	37	422	61	750	85
137	14	243	38	432	62	768	86
140	15	249	39	442	63	787	87
143	16	255	40	453	64	806	88
147	17	261	41	464	65	825	89
150	18	267	42	475	66	845	90
154	19	274	43	487	67	866	91
158	20	280	44	499	68	887	92
162	21	287	45	511	69	909	93
165	22	294	46	523	70	931	94
169	23	301	47	536	71	953	95
174	24	309	48	549	72	976	96

So the resistance value are marked as the following examples

1.96KΩ=196×10^{1}Ω=29B

12.4Ω=124×10^{-1}Ω=10X

(7) Standard E-24 and not belong to E-96 series values (≤±1%) of 0603 size: the marking is the same as 5% tolerance but marking as underli

333=33KΩ

680=68Ω

5. Dimension

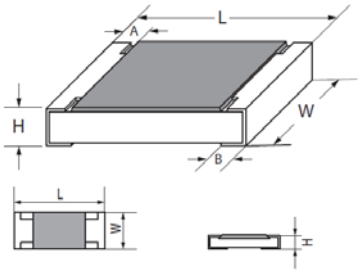

Type	Dimension(mm)				
	L	W	H	A	B
01005	0.40±0.02	0.20±0.02	0.13±0.02	0.10±0.05	0.10±0.03
0201	0.60±0.03	0.30±0.03	0.23±0.03	0.10±0.05	0.15±0.05
0402	1.00±0.10	0.50±0.05	0.35±0.05	0.20±0.10	0.25±0.10
0603	1.60±0.10	0.80±0.10	0.45±0.10	0.30±0.20	0.30±0.20
0805	2.00±0.15	1.25+0.15/-0.10	0.55±0.10	0.40±0.20	0.40±0.20
1206	3.10±0.15	1.55 +0.15/-0.10	0.55±0.10	0.45±0.20	0.45±0.20
1210	3.10±0.10	2.60±0.20	0.55±0.10	0.50±0.25	0.50±0.20
1812	4.50±0.20	3.20±0.20	0.55±0.20	0.50±0.20	0.50±0.20
2010	5.00±0.10	2.50±0.20	0.55±0.10	0.60±0.25	0.50±0.20
2512	6.35±0.10	3.20±0.20	0.55±0.10	0.60±0.25	0.50±0.20

6. Resistance Range

Type	Power Rating at 70℃	Resistance Range			
		0.5%	1.0%	2.0%	5.0%
01005	1/32W	---	10Ω-10MΩ	10Ω-10MΩ	1Ω -10MΩ
0201	1/20W	---	1Ω-10MΩ	1Ω-10MΩ	1Ω-10MΩ
0402	1/16W	1Ω-10MΩ	1Ω-10MΩ	1Ω-10MΩ	1Ω-10MΩ
0603	1/10W	1Ω-10MΩ	0.01Ω-10MΩ	0.01Ω-10MΩ	0.01Ω-10MΩ
0805	1/8W	1Ω-10MΩ	0.1Ω≤R＜10MΩ	0.1Ω≤R＜10MΩ	0.1Ω≤R＜10MΩ
	1/4W	---	0.01Ω≤R＜0.1Ω	0.01Ω≤R＜0.1Ω	0.01Ω≤R＜0.1Ω
1206	1/4W	1Ω-10MΩ	0.1Ω≤R＜10MΩ	0.1Ω≤R＜10MΩ	0.1Ω≤R＜10MΩ
	1/3W	---	0.01Ω≤R＜0.1Ω	0.01Ω≤R＜0.1Ω	0.01Ω≤R＜0.1Ω
1210	1/2W	1Ω-10MΩ	0.01Ω-10MΩ	0.01Ω-10MΩ	0.01Ω-10MΩ
1812	3/4W	1Ω-10MΩ	0.01Ω-10MΩ	0.01Ω-10MΩ	0.01Ω-10MΩ
2010	3/4W	1Ω-10MΩ	0.01Ω-10MΩ	0.01Ω-10MΩ	0.01Ω-10MΩ
2512	1W	1Ω-10MΩ	0.01Ω-10MΩ	0.01Ω-10MΩ	0.01Ω-10MΩ

7. Ratings

Type	Max. Working Voltage	Max. Overload Voltage	Dielectric withstanding Voltage	Resistance Value of Jumper	Rated Current of Jumper	Max. Overload Current of Jumper	Operating Temperature
01005	15V	30V	--	<50mΩ	0.5A	1A	-55℃~125℃
0201	25V	50V	--	<50mΩ	0.5A	1A	-55℃~155℃
0402	50V	100V	100V	<50mΩ	1A	2A	-55℃~155℃
0603	75V	150V	300V	<50mΩ	1A	2A	-55℃~155℃
0805	150V	300V	500V	<50mΩ	2A	5A	-55℃~155℃
1206	200V	400V	500V	<50mΩ	2A	10A	-55℃~155℃
1210	200V	500V	500V	<50mΩ	2A	10A	-55℃~155℃
1812	200V	500V	500V	<50mΩ	2A	10A	-55℃~155℃
2010	200V	500V	500V	<50mΩ	2A	10A	-55℃~155℃
2512	200V	500V	500V	<50mΩ	2A	10A	-55℃~155℃

8. Recommend the size of welding plate

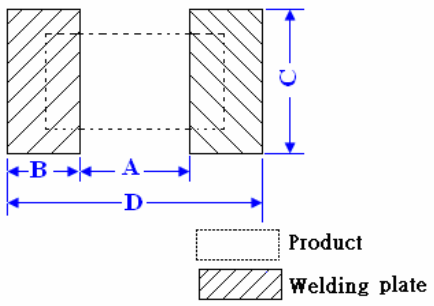

Type	Dimension(mm)			
	A	B	C	D
01005	0.14±0.03	0.2±0.03	0.2±0.03	0.54±0.03
0201	0.25±0.05	0.35±0.05	0.4±0.05	1.0±0.05
0402	0.50±0.05	0.45±0.05	0.5±0.05	1.4±0.05
0603	0.9±0.05	0.65±0.05	0.8±0.05	2.1±0.05
0805	1.0±0.1	1.0±0.1	1.3±0.1	3.0±0.1
1206	2.0±0.1	1.1±0.1	1.6±0.1	4.2±0.1
1210	2.0±0.1	1.1±0.1	2.6±0.1	4.2±0.1
1812	3.2±0.1	1.4±0.1	3.3±0.1	5.8±0.1
2010	3.6±0.1	1.3±0.1	2.6±0.1	6.2±0.1
2512	5.0±0.1	1.6±0.1	3.3±0.1	8.2±0.1

9. Derating Curve

Resistors shall have a power rating based on continuous load operation at an ambient temperature from -55℃ to 70℃. For temperature in excess of 70℃, the load shall be derated as shown in figure 1

Figure 1

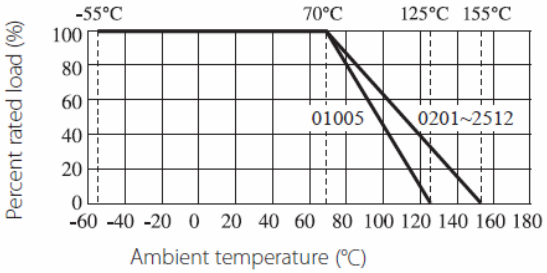

Voltage rating:

Resistors shall have a rated direct-current (DC) continuous working

Voltage or an approximate sine-wave root-mean-square (RMS) alternating-current (AC) continuous working voltage at commercial-line frequency and waveform corresponding to the power rating, as determined from the following formula:

$RCWV = \sqrt{P \times R}$

Where: RCWV commercial-line frequency and waveform (Volt.)

P = power rating (WATT.) R = nominal resistance (OHM)

In no case shall the rated DC or RMS AC continuous working voltage be greater than the applicable maximum value.

The overload voltage is 2.5 times RCWV or Max. Overload voltage whichever is less

10. Structure

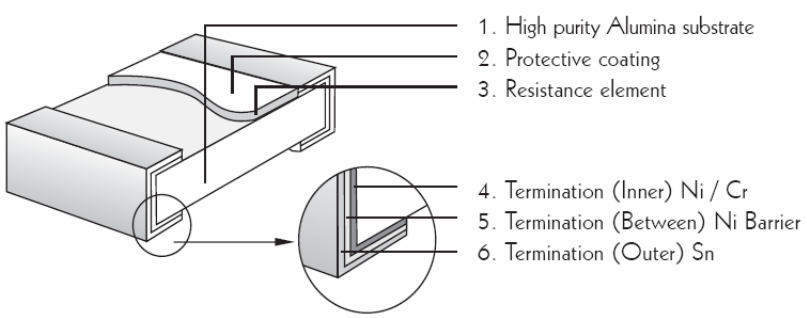

11. Performance Specification

Characteristic	Limits	Test Method (GB/T 5729&JIS-C-5201&IEC60115-1)
◎Temperature Coefficient	01005: 1Ω≤R＜10Ω: -200~+600PPM/℃ 10Ω≤R＜100Ω: ±300PPM/℃ 100Ω≤R≤10MΩ:±200PPM/℃ 0201: 1Ω≤R≤10Ω: -100~ + 350PPM/℃ >10Ω: ±200PPM/℃ 0402： 1Ω≤R≤10Ω: ±200PPM/°C >10Ω: ±100PPM/℃ 0603： 0.01Ω≤R≤0.03Ω:±1500 PPM/°C 0.03Ω＜R≤0.05Ω：±1000 PPM/°C 0.05Ω＜R＜1Ω: ±800PPM/°C 1Ω≤R≤10Ω: ±200PPM/°C >10Ω: ±100PPM/℃ 0805,1206,1210,2010,1812,2512: 0.01Ω≤R≤0.015Ω: ±1500PPM/°C 0.015Ω＜R≤0.03Ω: ±1000PPM/°C 0.03Ω＜R＜1Ω: ±800PPM/°C 1Ω≤R≤10Ω: ±200PPM/°C >10Ω: ±100PPM/℃	4.8 Natural resistance changes per temp. Degree centigrade $\frac{R_2-R_1}{R_1(t_2-t_1)} \times 10^6$ (PPM/℃) R_1: Resistance Value at room temperature（t_1）; R_2: Resistance at test temperature (Upper limit temperature or Lower limit temperature) t_1: +25℃ or specified room temperature t_2: Upper limit temperature or Lower limit temperature test temperature
◎ *Short-time overload	±0.5%,±1%: ±(1.0%+0.05Ω) ±2%,±5% : ±(2.0%+0.05Ω) 01005: ±(2.0%+0.05Ω)	4.13 Permanent resistance change after the application of a potential of 2.5 times RCWV or Max. Overload Voltage whichever less for 5 seconds..
	* <50mΩ	Apply max Overload current for 0Ω
* Dielectric withstanding voltage	No evidence of flashover mechanical damage, arcing or insulation breaks down.	4.7 Resistors shall be clamped in the trough of a 90℃metallic v-block and shall be tested at ac potential respectively specified in the given list of each product type for 60-70 seconds.
◎ *Solderability	Coverage must be over 95%.	Wave solder: Test temperature of solder: 245℃±3℃ dipping time in solder: 2-3 seconds.
	Go up tin rate bigger than half of end pole	Reflow: 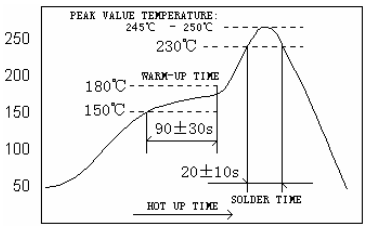

◎ Rapid change of temperature	±0.5%,±1%: ±(0.5%+0.05Ω) ±2%,±5% : ±(1.0%+0.05Ω) 01005: ±(1.0%+0.05Ω)	4.19 30 min at -55 °C and 30 min at 155°C; 100 cycles.
◎ Soldering heat	±(1.0%+0.05Ω)	4.18 Dip the resistor into a solder bath having a temperature of 260℃±5℃ and hold it for 10±1 seconds.
Terminal bending	±(1.0%+0.05Ω)	4.33 Twist of test board: Y/X = 3/90 mm for 60Seconds
* Insulation resistance	≥1,000 MΩ	4.6 The measuring voltage shall be ,measured with a direct voltage of (100±15)V or a voltage equal to the dielectric withstanding voltage., and apply for 1min.
◎ Humidity (steady state)	±0.5%,±1%: ±(0.5%+0.05Ω) ±2%,±5% : ±(3.0%+0.05Ω) 01005(-55℃~125℃): ±(2.0%+0.05Ω)	4.24Temporary resistance change after 240 hours exposure in a humidity test chamber controlled at 40±2℃ and 90-95% relative humidity,
◎ *Load life in humidity	±0.5%,±1% : ±(1.0%+0.05Ω) ±2%,±5% : ±(3.0%+0.05Ω) 01005: ±(3.0%+0.05Ω)	7.9 Resistance change after 1,000 hours (1.5 hours "ON",0.5 hour "OFF") at RCWV in a humidity chamber controlled at 40℃±2℃ and 90 to 95% relative humidity.
	* <50mΩ	Apply to rated current for 0Ω
◎ *Load life	±0.5%,±1%: ±(1.0%+0.05Ω) ±2%,±5% : ±(3.0%+0.05Ω) 01005: ±(3.0%+0.05Ω)	4.25.1 Permanent resistance change after 1,000 hours operating at RCWV with duty cycle 1.5 hours "ON", 0.5 hour "OFF" at 70℃±2℃ ambient.
	* <50Mω	Apply to rated current for 0Ω
◎ *Low Temperature Storage	±0.5%,±1% : ±(1.0%+0.05Ω) ±2%,±5% : ±(3.0%+0.05Ω)	4.23.4 Lower limit temperature，for 2H.
	* <50mΩ	Apply to rated current for 0Ω
◎ *High Temperature Exposure	±0.5%,±1%: ±(1.0%+0.05Ω) ±2%,±5% : ±(3.0%+0.05Ω)	4.23.2 Upper limit temperature ，for 16H.
	01005: ±(1.0%+0.05Ω)	4.23.2 Upper limit temperature ，for 1000H.
	* <50mΩ	Apply to rated current for 0Ω
◎ *Leaching	No visible damage	J-STD-002 Test D Samples completely immersed for 30 sec in solder bath at 260℃.

The resistors of 0Ω only can do the characteristic noted of *

The resistors of 01005 & 0201 only can do the characteristic noted of ◎

12. Packing of Surface Mount Resistors

12.1 Dimension of Paper Taping :(Unit: mm)

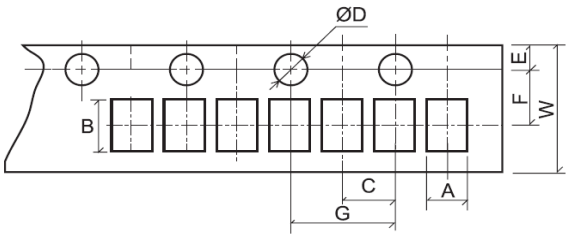

Type	A	B	C ±0.05	ΦD +0.1 -0	E ±0.1	F ±0.05	G ±0.1	W ±0.2	T
01005	0.24±0.05	0.45±0.05	2.00	1.50	1.75	3.50	4.00	8.00	0.40±0.1
0201	0.40±0.05	0.70±0.05	2.00	1.50	1.75	3.50	4.00	8.00	0.42±0.1
0402	0.65±0.10	1.20±0.10	2.00	1.50	1.75	3.50	4.00	8.00	0.42±0.05

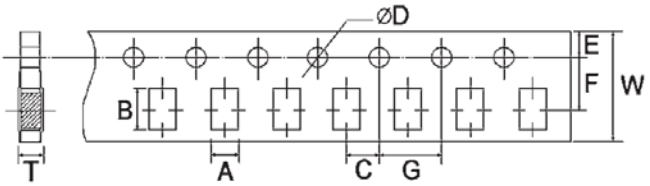

Type	A ±0.2	B ±0.2	C ±0.05	ΦD +0.1 -0	E ±0.1	F ±0.05	G ±0.1	W ±0.2	T ±0.1
0603	1.10	1.90	2.00	1.50	1.75	3.50	4.00	8.00	0.67
0805	1.65	2.40	2.00	1.50	1.75	3.50	4.00	8.00	0.81
1206	2.00	3.60	2.00	1.50	1.75	3.50	4.00	8.00	0.81
1210	2.80	3.50	2.00	1.50	1.75	3.50	4.00	8.00	0.75

12.2 Dimension of Embossed Taping: (Unit: mm)

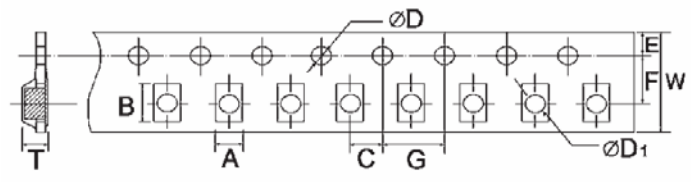

Type	A ±0.2	B ±0.2	C ±0.05	+ 0.1 ϕD - 0	+0.25 ϕD1 -0	E ±0.1	F ±0.05	G ±0.1	W ±0.2	T ±0.1
2010	2.90	5.60	2.00	1.50	1.50	1.75	5.50	4.00	12.00	1.00
1812	3.50	4.80	2.00	1.50	1.50	1.75	5.50	4.00	12.00	1.00
2512	3.50	6.70	2.00	1.50	1.50	1.75	5.50	4.00	12.00	1.00

12.3 Dimension of Reel：(Unit: mm)

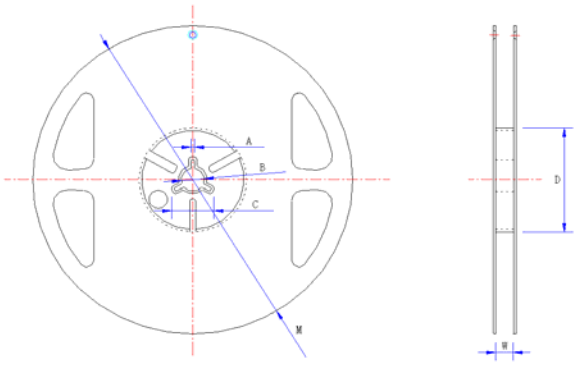

Type	Taping	Qty/Reel	A ±0.5	B ±0.5	C ±0.5	D ±1	M ±2	W ±1
01005	Paper	20,000pcs	2.0	13.0	21.0	60.0	178.0	10.0
0201	Paper	15,000pcs	2.0	13.0	21.0	60.0	178.0	10.0
0402	Paper	10,000pcs	2.0	13.0	21.0	60.0	178.0	10.0
0603	Paper	5,000pcs	2.0	13.0	21.0	60.0	178.0	10.0
0805	Paper	5,000pcs	2.0	13.0	21.0	60.0	178.0	10.0
1206	Paper	5,000pcs	2.0	13.0	21.0	60.0	178.0	10.0
1210	Paper	5,000pcs	2.0	13.0	21.0	60.0	178.0	10.0
2010	Embossed	4,000pcs	2.0	13.0	21.0	60.0	178.0	13.8
1812	Embossed	4,000pcs	2.0	13.0	21.0	60.0	178.0	13.8
2512	Embossed	4,000pcs	2.0	13.0	21.0	60.0	178.0	13.8

13. Note

13.1. UNI-ROYAL recommend the storage condition temperature: 15℃~35℃, humidity :25%~75%.
(Put condition for individual product).Even under UNI-ROYAL recommended storage condition, solderability of products over 1 year old.
(Put condition for each product) may be degraded.

13.2. Store / transport cartons in the correct direction, which is indicated on a carton as a symbol.
Otherwise bent leads may occur due to excessive stress applied when dropping of a carton.

13.3. Product performance and soldered connections may deteriorate if the products are stored in the following places:
a. Storage in high Electrostatic.
b. Storage in direct sunshine、rain and snow or condensation.
c. Where the products are exposed to sea winds or corrosive gases, including Cl_2, H_2S_3 NH_3, SO_2, NO_2.

13.4. The products are used in circuit board thickness greater than 1.6mm. If customers use less than the thickness of the circuit board that you should confirm with the company, in order to recommend a more suitable product.

14. Record

Version	Description of amendment	Page	Date	Amended by	Checked by
1	First issue of this specification	1~7	Mar.20, 2018	Chen Haiyan	Chen Nana
2	Modify 0201 packing quantity	7	May.24, 2018	Chen Haiyan	Chen Nana
3	1. Add 0603 code mark 2. Modify the operating temperature of 01005 3. Modify the Performance Specification	3~4 5 6~7	Feb.12, 2019	Chen Haiyan	Xu Yuhua

Uniroyal Electronics Global Co., Ltd. , all rights reserved. Spec. herein would be changed at any time without prior notice.

X-ON Electronics

Largest Supplier of Electrical and Electronic Components

Click to view similar products for Thick Film Resistors - SMD ***category:***

Click to view products by Uniroyal ***manufacturer:***

Other Similar products are found below :

CR-05FL7--150R CR-05FL7--19K6 CR-05FL7--243R CR-05FL7--40K2 CR-05FL7--698K CR-12FP4--324R CR-12JP4--680R M55342K06B1E78RS3 M55342K06B6E19RWL M55342K06B6E81RS3 M55342M05B200DRWB M55342M06B4K70MS3 MC0603-511-JTW 742C083750JTR MCR01MZPF1202 MCR01MZPF1601 MCR01MZPF1800 MCR01MZPF6201 MCR01MZPF9102 MCR01MZPJ113 MCR01MZPJ121 MCR01MZPJ125 MCR01MZPJ751 MCR03EZHJ103 MCR03EZPFX2004 MCR03EZPJ270 MCR03EZPJ821 MCR10EZPF1102 MCR18EZPJ330 RC0603F1473CS RC0603F150CS RC1005F1152CS RC1005F1182CS RC1005F1372CS RC1005F183CS RC1005F1911CS RC1005F1912CS RC1005F203CS RC1005F2052CS RC1005F241CS RC1005F2431CS RC1005F3011CS RC1005F303CS RC1005F4321CS RC1005F4642CS RC1005F471CS RC1005F4751CS RC1005F5621CS RC1005F6041CS RC1005J106CS