HSF

NOTES:
Rated Current:2.0AMP.
Contact Resistance:20mΩ Max.
Withstand Voltage:500V AC/DC
Insulation Resistance:1000MΩ Min.
Operation Temperature:-40℃ to +105℃

Contact Material:Brass
Contact Plating:Au or Sn Over Ni
Insulator Material:PA9T+33%G.F UL94V-0 BK

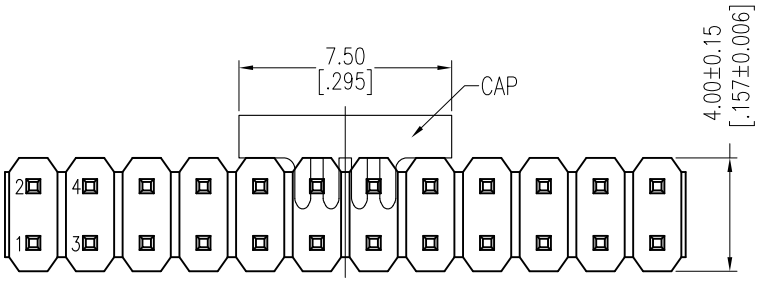

Dual Numbers

Recommended P.C.B Layout (Top Side)
(PCB BOARD TOLERANCE±0.05)

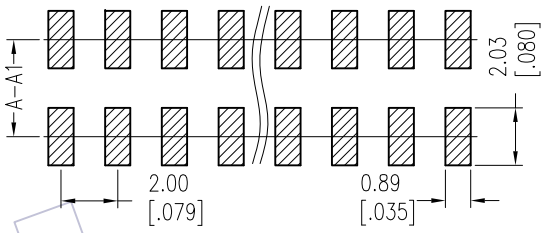

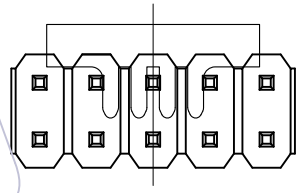

Odd Number

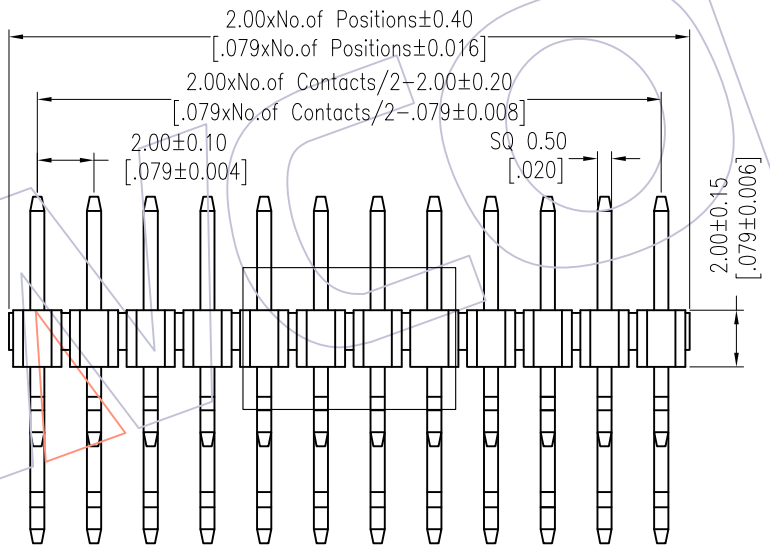

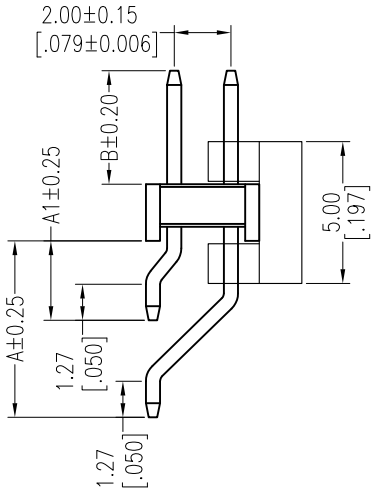

Ordering Information

1220-12 XX XX Z XXX C R XX ⚠1

No.of Pins	Contact Plating	Pin Length(Short)	Insulator	Packing	Series No.
Per Row:02~40	G0=Gold Flash	L=A1+B+2.2	Material	T=Tube	01~99
	G3=10u"Gold	Standard:069=6.9	C=PA9T	P=Tube+CAP	
	G4=15u"Gold	080=8.0		R=Tape&Reel+CAP	
	G5=30u"Gold	090=9.0			
	S0=Gold Flash/Tin				
	S3=10u"Gold/Tin				
	S4=15u"Gold/Tin				
	S5=30u"Gold/Tin				
	SN=Tin				
	SM=Matte Tin				

Item	Pin Lenght	A1	A	B	Mating
Standard	6.90	2.80	6.22	1.90	
	8.00	2.80	6.22	3.00	
	9.00	2.80	6.22	4.00	2240 2243 2263 2272
Alternate					

REV	DATE	MODIFICATION DESCRIPTION	CHANGE
A1	2018/01/19	Modify P/N	⚠1
A0	2012/04/26	NEW	------

OPERATION	
X.X	±0.40
X.XX	±0.25
X.XXX	±0.15
Angle	± 3°
DIM	TOL

DRAW	Liu	DATE	2018.01.19
CHECK		DATE	
APPROVE		DATE	

SCALE	Fit
UNIT	mm
SIZE	A4
SHEET	1/1
PROJ.	

PART NO. 1220-12XXXXZXXXCRXX ⚠1

TITLE: PH2.00 DUAL ROW 90° SMT H=2.0

Customer NO.

WCON
Http: www.wcon.com

WCON-Dongguan
Tel: +86 769 85358920
Fax: +86 769 85358915
E-mail: sales@wcon.com

WCON-Kunshan
Tel: +86 512 57468408
Fax: +86 512 57468468
E-mail: salesks@wcon.com

X-ON Electronics

Largest Supplier of Electrical and Electronic Components

Click to view similar products for Headers & Wire Housings ***category:***

Click to view products by Wcon ***manufacturer:***

Other Similar products are found below :

95000-104TRLF 10135584-644402LF DF62W-EP2022PCA 95000-106TRLF DF62W-2022SCA DF62W-EP2022PC 2203348 DF62W-2022SC 1084018 1029039 1084017 802-10-012-10-002000 1112640 1112639 891-007-9SS-BST1T 000-34000 0008550134 0009482033 0009507031 57102-F02-18ULF 57102-S06-03LF 57202-S52-04LF PCN6-15S-2.5E 0039019024 58102-G61-06LF 582553-1 0009485154 0009508121 0022285053 0050291907 018731A LY20-4P-DT1-P1E-BR 02.125.8002.8 60101931 60598-1 (Cut Strip) M1625-3R/100 61062-3 61082-181009 CSU011177004 636-1427 638009-1 641938-9 641991-4 644168-1 644827-2 647662-1 65039-019ELF 65692-001LF 65781-018 65781-047