HSF

NOTES:
Rated Current:3.0AMP
Contact Resistance:20mΩ max
Withstand Voltage:1000V AC/DC
Insulation Resistance:1000MΩ min
Operation Temperature:−25℃ to +85℃

Contact Material:Brass
Contact plating:Au Or Sn Over Ni
Insulator Material:PA66(UL94V−0)

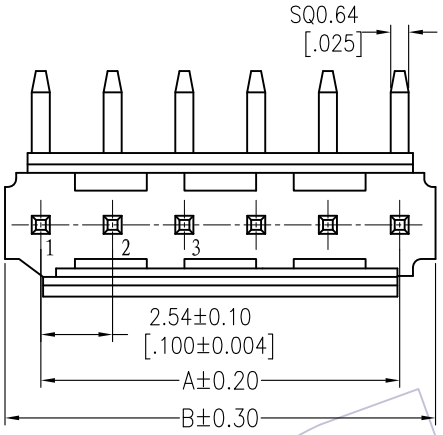

Recommended P.C.B Layout(Top Side)
(PCB BOARD TOLERANCE±0.05)

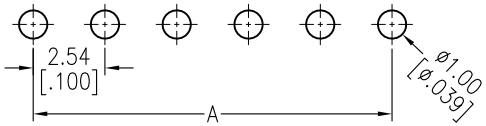

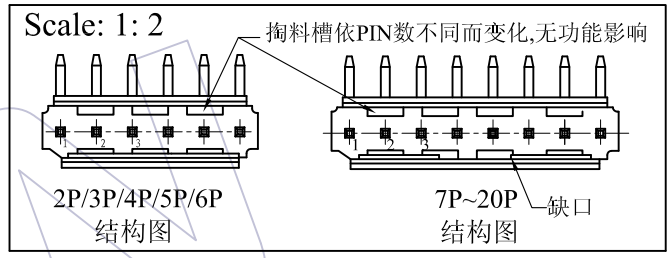

Specification & Ordering Information:

Circuit	Part No.	Dimension	
		A	B
02	WF2547−1WR02XX1	2.54	5.08
03	WF2547−1WR03XX1	5.08	7.62
04	WF2547−1WR04XX1	7.62	10.16
05	WF2547−1WR05XX1	10.16	12.70
06	WF2547−1WR06XX1	12.70	15.24
07	WF2547−1WR07XX1	15.24	17.78
08	WF2547−1WR08XX1	17.78	20.32
09	WF2547−1WR09XX1	20.32	22.86
10	WF2547−1WR10XX1	22.86	25.40
11	WF2547−1WR11XX1	25.40	27.94
12	WF2547−1WR12XX1	27.94	30.48
13	WF2547−1WR13XX1	30.48	33.02
14	WF2547−1WR14XX1	33.02	35.56
15	WF2547−1WR15XX1	35.56	38.10
16	WF2547−1WR16XX1	38.10	40.64
17	WF2547−1WR17XX1	40.64	43.18
18	WF2547−1WR18XX1	43.18	45.72
19	WF2547−1WR19XX1	45.72	48.26
20	WF2547−1WR20XX1	48.26	50.80

Ordering Information

WF2547 - 1 WR XX XX X X 1

- No.of Row: Single Row
- No.of pins: 02P~20P
- Contact Plating: S0=Gold Flash/Tin, S3=10u"Gold/Tin, S4=15u"Gold/Tin, S5=30u"Gold/Tin, G0=Gold Flash, G3=10u"Gold, G4=15u"Gold, G5=30u"Gold, Blank=Tin
- Color: W=White, U=Blue, B=Black
- Packing: 0=PE Bag, T=Tube

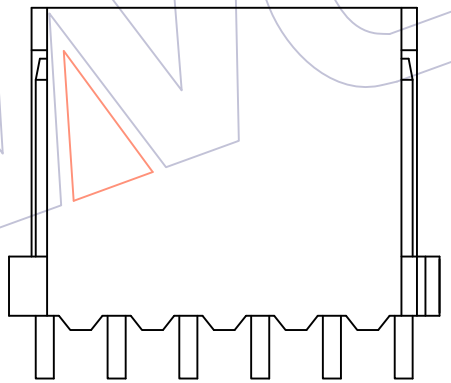

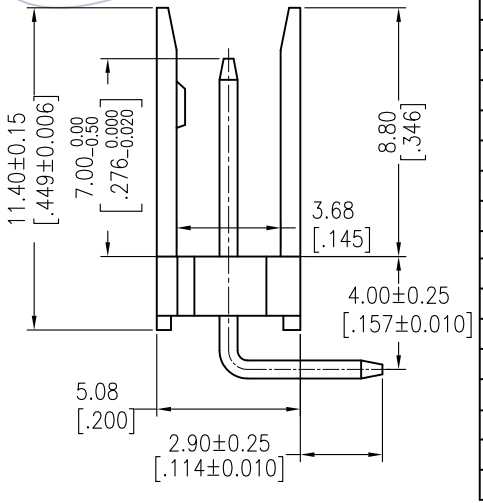

REV	DATE	MODIFICATION DESCRIPTION	CHANGE
A0	2012/09/08	NEW	——

OPERATION	
X.X	±0.40
X.XX	±0.25
X.XXX	±0.15
Angle	± 3°
DIM	TOL

DRAW	JYHuang	DATE	2012/09/08
CHECK		DATE	
APPROVE		DATE	

SCALE	FIT
UNIT	mm / inch
SIZE	A4
SHEET	1/1
PROJ.	

PART NO. SEE TAB

TITLE: "T"TYPE 2.54 WAFER SINGLE ROW 90°

Customer NO.

WCON
Http: www.wcon.com

WCON−Dongguan
Tel: +86 769 85358920
Fax: +86 769 85358915
E-mail: sales@wcon.com

WCON−Kunshan
Tel: +86 512 57468408
Fax: +86 512 57468468
E-mail: salesks@wcon.com

X-ON Electronics

Largest Supplier of Electrical and Electronic Components

Click to view similar products for Headers & Wire Housings ***category:***

Click to view products by Wcon ***manufacturer:***

Other Similar products are found below :

95000-104TRLF 10135584-644402LF DF62W-EP2022PCA 95000-106TRLF DF62W-2022SCA DF62W-EP2022PC 2203348 DF62W-2022SC 1084018 1029039 1084017 802-10-012-10-002000 1112640 1112639 891-007-9SS-BST1T 000-34000 0008550134 0009482033 0009507031 57102-F02-18ULF 57102-S06-03LF 57202-S52-04LF PCN6-15S-2.5E 0039019024 58102-G61-06LF 582553-1 0009485154 0009508121 0022285053 0050291907 018731A LY20-4P-DT1-P1E-BR 02.125.8002.8 60101931 60598-1 (Cut Strip) M1625-3R/100 61062-3 61082-181009 CSU011177004 636-1427 638009-1 641938-9 641991-4 644168-1 644827-2 647662-1 65039-019ELF 65692-001LF 65781-018 65781-047