HSF

NOTES:
Rated Current:3.0A
Contact Resistance:20mΩ max
Withstand Voltage:1000V AC/Minute
Insulation Resistance:1000MΩ min
Operation Temperature:−25℃ to+85℃

Insulator Material:PBT+30%G.F UL94V−0
Used with:WF2547−T
Mated with:WF2547−Wafer

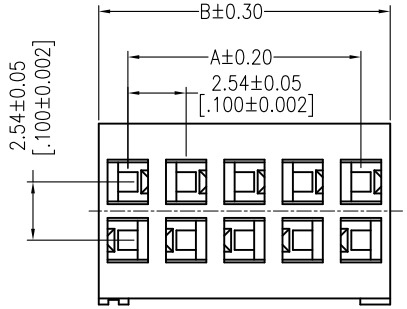

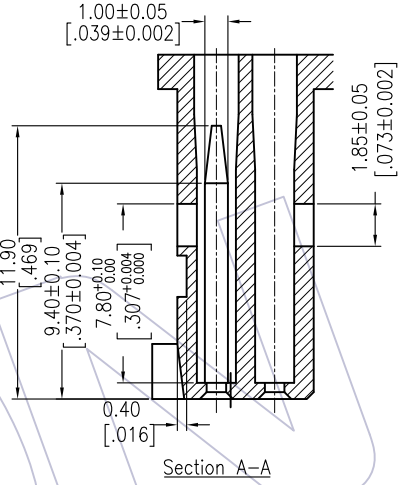

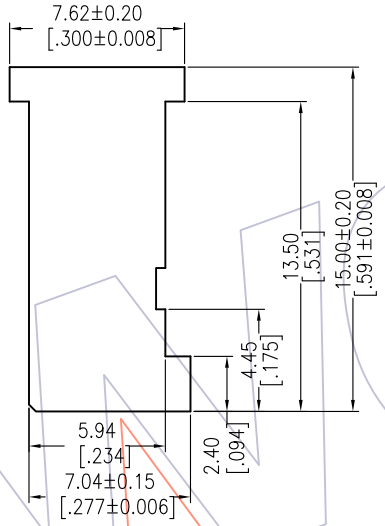

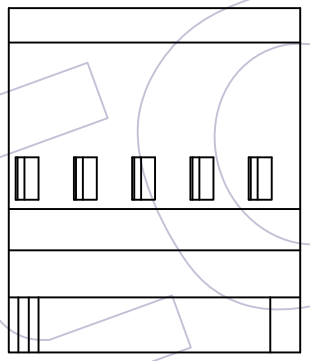

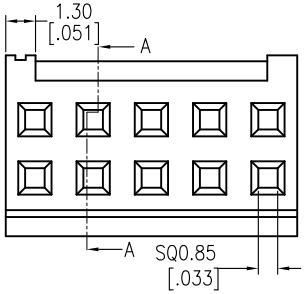

Ordering Information

WF2547 - 2 H XX X 0 1

- XX: No.of pins 02P~20P
- X: Color E=Beige W=White B=Black U=Blue
- 0: Packing 0=PE Bag

Dimensional & Ordering Information:

Circuit	Part No.	Dimension A	Dimension B
2x02	WF2547−2H02X01	2.54	5.08
2x03	WF2547−2H03X01	5.08	7.62
2x04	WF2547−2H04X01	7.62	10.16
2x05	WF2547−2H05X01	10.16	12.70
2x06	WF2547−2H06X01	12.70	15.24
2x07	WF2547−2H07X01	15.24	17.78
2x08	WF2547−2H08X01	17.78	20.32
2x09	WF2547−2H09X01	20.32	22.86
2x10	WF2547−2H10X01	22.86	25.40
2x12	WF2547−2H12X01	27.94	30.48
2x15	WF2547−2H15X01	35.56	38.10
2x18	WF2547−2H18X01	43.18	45.72
2x20	WF2547−2H20X01	48.26	50.80

REV	DATE	MODIFICATION DESCRIPTION	CHANGE
A1	2013/11/14	Add 2X02P Information	——
A0	2012/09/28	NEW	——

OPERATION	
X.X	±0.40
X.XX	±0.25
X.XXX	±0.15
Angle	± 3°
DIM	TOL

DRAW JYHuang	DATE 2013/11/14	SCALE	FIT
CHECK	DATE	UNIT	mm inch
APPROVE	DATE	SIZE	A4
		SHEET	1/1
		PROJ.	

PART NO. SEE TAB

TITLE: 2.54 Housing Dual Row "T"Type

Customer NO.

WCON
Http: www.wcon.com

WCON−Dongguan
Tel: +86 769 85358920
Fax: +86 769 85358915
E−mail: sales@wcon.com

WCON−Kunshan
Tel: +86 512 57468408
Fax: +86 512 57468468
E−mail: salesks@wcon.com

X-ON Electronics

Largest Supplier of Electrical and Electronic Components

Click to view similar products for Headers & Wire Housings ***category:***

Click to view products by Wcon ***manufacturer:***

Other Similar products are found below :

95000-104TRLF 10135584-644402LF DF62W-EP2022PCA 95000-106TRLF DF62W-2022SCA DF62W-EP2022PC 2203348 DF62W-2022SC 1084018 1029039 1084017 802-10-012-10-002000 1112640 1112639 891-007-9SS-BST1T 000-34000 0008550134 0009482033 0009507031 57102-F02-18ULF 57102-S06-03LF 57202-S52-04LF PCN6-15S-2.5E 0039019024 58102-G61-06LF 582553-1 0009485154 0009508121 0022285053 0050291907 018731A LY20-4P-DT1-P1E-BR 02.125.8002.8 60101931 60598-1 (Cut Strip) M1625-3R/100 61062-3 61082-181009 CSU011177004 636-1427 638009-1 641938-9 641991-4 644168-1 644827-2 647662-1 65039-019ELF 65692-001LF 65781-018 65781-047