HSF

NOTES:
Current Rating:5.0A AMP
Contact Resistance:10milliohm Max
Withstand Voltage:1000V AC/Minute
Insulation Resistance:1000Megohm Min
Operation Temperature:−25℃ to +85℃

Housing Material:LCP+30%GF(UL94V−0)
Contact Material:Copper alloy
Contact plating:Au/Sn over Ni Plating

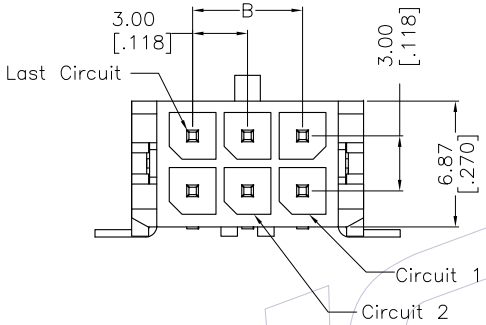

RECOMMENDED PCB LAYOUT
TOLERANCE IS ±0.05

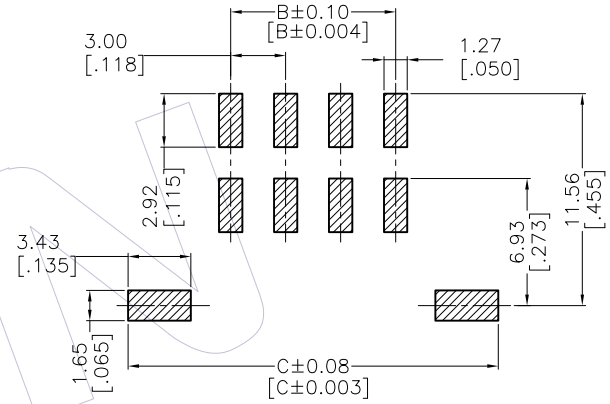

Ordering Information

WF3001-2 WZ XX B X 3

Terminal shape:
WZ:Wafer 90° SMT

NO.of Pins Per
Row:01~12Pin

Packing:
0=PE Bag
T=Tube
A=Tray
R=Tape&Reel

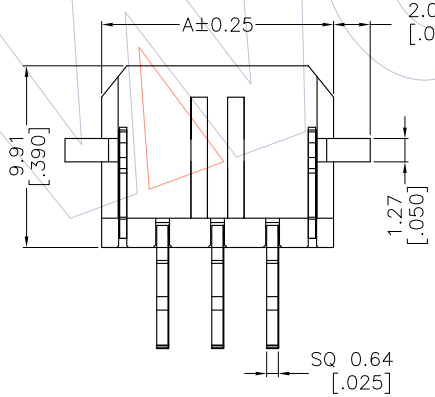

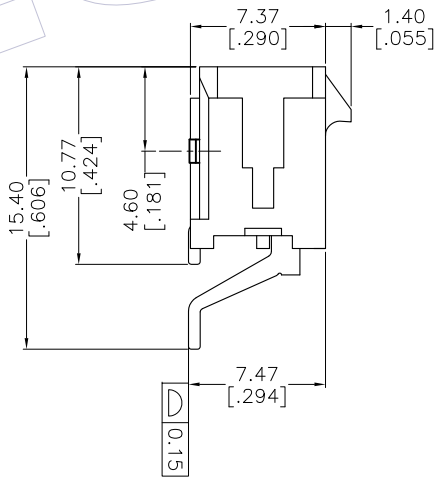

Circuit	A	B	C
02	6.65[0.262]	NA	11.20[0.441]
04	9.65[0.380]	3.00[0.118]	14.20[0.559]
06	12.65[0.498]	6.00[0.236]	17.20[0.677]
08	15.65[0.616]	9.00[0.355]	20.20[0.795]
10	18.65[0.735]	12.00[0.473]	23.20[0.913]
12	21.65[0.853]	15.00[0.591]	26.20[1.031]
14	24.65[0.971]	18.00[0.709]	29.20[1.150]
16	27.65[1.089]	21.00[0.827]	32.20[1.268]
18	30.65[1.207]	24.00[0.945]	35.20[1.386]
20	33.65[1.325]	27.00[1.063]	38.20[1.504]
22	36.65[1.443]	30.00[1.181]	41.20[1.622]
24	39.65[1.561]	33.00[1.299]	44.20[1.740]

REV	DATE	MODIFICATION DESCRIPTION	CHANGE
A1	2012.05.03	料号由WF3001-2WZXXBX3变更为WF3001-2WZXXBX3	Atomy
A0	2011.12.20	NEW	-

OPERATION	
X.X	±0.40
X.XX	±0.25
X.XXX	±0.15
Angle	± 3°
DIM	TOL

DRAW	FZY	DATE	2012.05.03
CHECK		DATE	
APPROVE		DATE	

SCALE	1:1
UNIT	mm / inch
SIZE	A4
SHEET	1/1
PROJ.	

PART NO.
⚠ WF3001-2WZXXBX3

TITLE:
3.00 WAFER DUAL ROW
90° SMT WITH LATCH

Customer NO.

WCON
Http: www.wcon.com

WCON−Dongguan
Tel: +86 769 85358920
Fax: +86 769 85358915
E-mail: sales@wcon.com

WCON−Kunshan
Tel: +86 512 57468408
Fax: +86 512 57468468
E-mail: salesks@wcon.com

X-ON Electronics

Largest Supplier of Electrical and Electronic Components

Click to view similar products for Headers & Wire Housings ***category:***

Click to view products by Wcon ***manufacturer:***

Other Similar products are found below :

95000-104TRLF 10135584-644402LF DF62W-EP2022PCA 95000-106TRLF DF62W-2022SCA DF62W-EP2022PC 2203348 DF62W-2022SC 1084018 1029039 1084017 802-10-012-10-002000 1112640 1112639 891-007-9SS-BST1T 000-34000 0008550134 0009482033 0009507031 57102-F02-18ULF 57102-S06-03LF 57202-S52-04LF PCN6-15S-2.5E 0039019024 58102-G61-06LF 582553-1 0009485154 0009508121 0022285053 0050291907 018731A LY20-4P-DT1-P1E-BR 02.125.8002.8 60101931 60598-1 (Cut Strip) M1625-3R/100 61062-3 61082-181009 CSU011177004 636-1427 638009-1 641938-9 641991-4 644168-1 644827-2 647662-1 65039-019ELF 65692-001LF 65781-018 65781-047