XL-2520IRC/TR10

技术数据表 Technical Data Sheet

2520红外发射940（反贴） 贴片小蝴蝶弯脚朝上

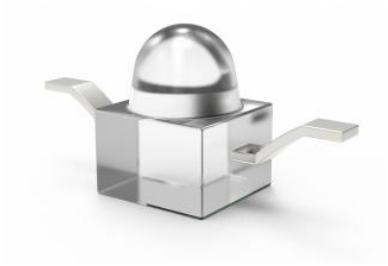

特点（Characteristics）：

* 外观尺寸（L/W/H）:1.6*0.8*0.55 mm
  Outline Dimensions (L / w / h): 1.6 x 0.8 x 0.55 mm
* 颜色及胶体：红外940nm/透明胶体
  Color and colloid: infrared 940nm / transparent colloid
* 环保工艺符合ROHS要求
  Environmental protection products Complied With ROHS Directive
* EIA规范标准包装
  EIA standard packaging
* 适用于SMT贴片自动化生产
  Suitable for SMT automatic production
* 适用于红外线回流焊制程
  Suitable for infrared reflow soldering process

应用领域（Product application）：

* 医用设备：内窥镜、血氧仪
  Medical equipment: endoscope, blood oximeter
* 红外遥控器
  Infrared remote controller
* 摄像监控头
  Camera monitoring head
* 工业控制：计数器、热成像、智能电表
  Industrial control: counters, thermal imaging, smart meter
* 红外光电开关
  Infrared photoelectric switch
* 无线通信与信号传输
  Wireless communication and signal transmission
* 智能小车, 机器人
  Intelligent car, robot

目录

Catalogue

电性参数
Electrical Characteristics.....3

典型特性曲线
Typical Characteristic Curves.....6

可靠性实验
Reliability Test Items And Conditions.....7

外形尺寸
Outline Dimensions.....8

包装
Packaging.....9

焊接指导
Guideline for Soldering..... 11

使用注意事项
Precautions.....13

电性参数

Electrical Characteristics

✧**极限参数** （温度=25℃）：

Absolute Maximum Ratings (Temperature=25°C):

参数名称 **Parameter**	符号 **Symbol**	最大额定值 **Maximum rating**	单位 **Unit**
消耗功率 Consumed power	Pd	35	mW
正向脉冲电流 (1/10占空比, 0.1ms脉宽) Peak Forward current(1/10 duty cycle, 0.1ms pulse width)	I_{FP}	80	mA
正向工作电流 Forward working current	I_F	20	mA
反向电压 Reverse voltage	V_R	5	V
工作环境温度 Operating ambient temperature	Topr	-20°C ～ +85°C	
储存环境温度 Storage ambient temperature	Tstg	-40°C ～ +85°C	
焊接条件 Welding conditions	Tsol	回流焊（reflow soldering）：260℃，6s 手动焊（manual welding ）：300℃，3s	

光电参数（温度=25℃）：Electro-Optical Charasteristics (Temperature=25°C):

参数 Parameter	符号 Symbol	最小值 Min	代表值 Typ	最大值 Max	单位 Unit	测试条件 Test conditions
辐射强度 radiation intensity	IV	3	/	6	mW/sr	IF = 20mA
半光强视角 Half light angle	2θ1/2	/	20	/	deg	IF = 20mA
主波长 Dominant Wave Length	λD	920	940	960	nm	IF = 20mA
正向电压 Forward Voltage	VF	1.2	1.4	1.6	V	IF=20mA
反向电流 Reverse Current	IR	/	/	10	uA	VR=5V

备注: 1. 发光强度是由光纤和过滤器的组合测定的，因此接近视觉感应曲线
2. 半光强视角是轴向发光强度一半时的离轴角.
3. 主波长λd源自CIE色度图，代表单一的波长，它定义了器件的颜色

Remarks: 1.The luminous intensity is determined by the combination of optical fiber and filter, so it is close to the visual induction curve
2. Half intensity angle is the off-axis angle when the axial luminous intensity is half
3. Main wavelength λ D is derived from CIE chromaticity diagram, representing a single wavelength, which defines the color of the device

电压分档:
Voltage grading:

代码 Code	最小值 Min	最大值 Max	单位 Unit	测试条件 Test conditions
A00	1.2	1.4	V	IF=20mA

波长分档:
Wavelength grading:

代码 Code	最小值 Min	最大值 Max	单位 Unit	测试条件 Test conditions
TR4	940	950	nm	IF=20mA

典型特性曲线

Typical Characteristics Curves

光谱分布曲线
Relative Intensity Vs. Wavelength

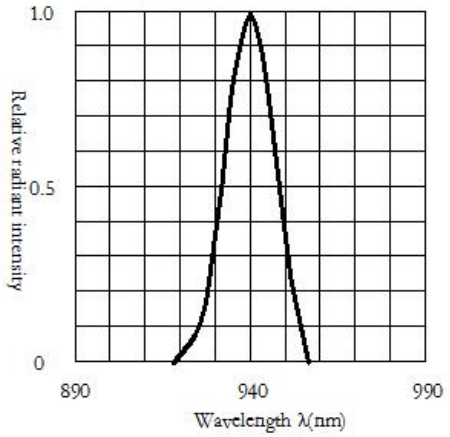

环境温度与电流的关系
Forward current derating curve Vs. Amblent temperature

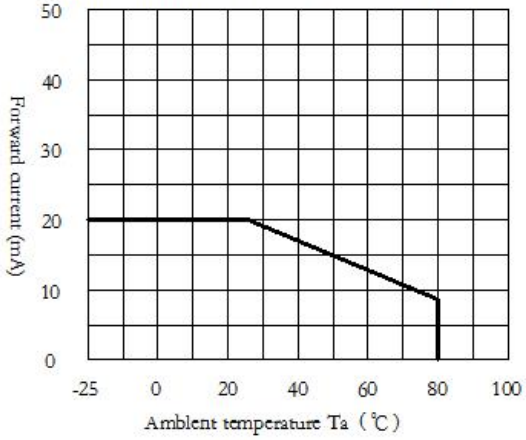

正向电压与正向电流的关系
Forward voltage Vs. Forward current

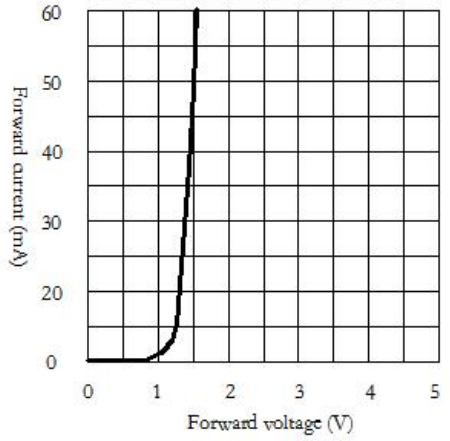

环境温度与相对光强的关系
Amblent temperature Vs. Relative luminous intensity

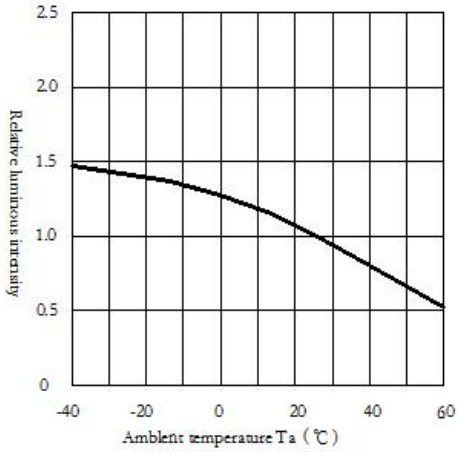

Fig.5 Relative Radiant Intensity vs. Forward Current

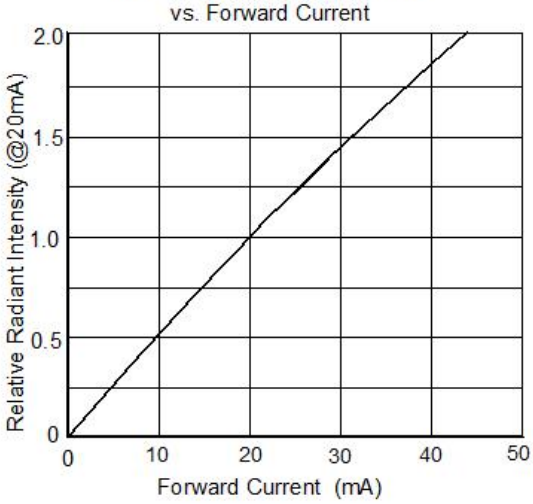

Fig.6 Radiation diagram(Ta=25°C)

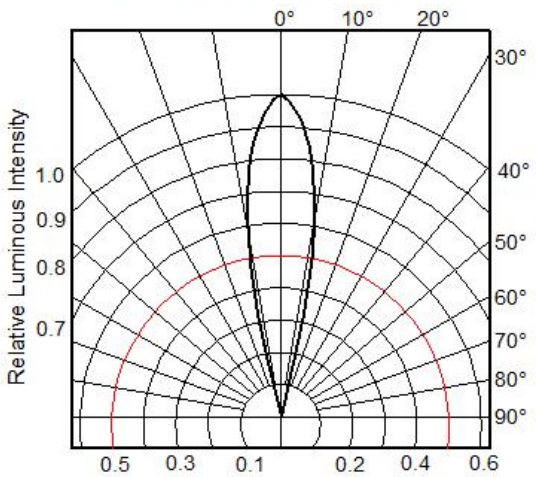

可靠性实验

Reliability experiment

测试项目 Test Parameter	参考标准 Reference Criterion	测试条件 Test Condition	测试次数 Number of tests	失效判定标准 Failure criteria	失效LED数量 Number of failed LEDs
防潮等级 Moisture proof grade	JEITA ED-4701 300 301	回流焊最高温=260℃,10秒，2次回流焊Maximum reflow temperature = 260 ℃, 10 seconds, twice reflow；回流焊之前存储条件：30，相对湿度=70%，168H；Storage conditions before reflow soldering: 30 ℃, relative humidity = 70%	-	**# 1**	0/22
焊接信赖性（无铅回流焊） Welding reliability (lead free reflow soldering)	JEITA ED-4701 303 303A	回流焊最高温度=245±5℃，5秒（无铅回流焊） Maximum reflow temperature = 245 ± 5 ℃, 5 seconds (lead-free reflow)	-	**# 2**	0/22
冷热循环 Thermal cycling	JESD22-A104	-40℃ 30分钟~25℃ 5分钟~100℃ 30分钟~25℃ 5分钟	300 个循环	**# 1**	0/22
冷热冲击 Thermal Shock	JESD22-A106	-35℃ 15分钟 转换时间3分钟 85℃ 15分钟	300 个循环	**# 1**	0/22
高温存储High temperature storage	JESD22-A103	Ta=100℃	1000小时	**# 1**	0/22
低温存储Low temperature storage	JESD22-A119	Ta=-40℃	1000小时	**# 1**	0/22
常温老化Normal temperature aging	JESD22-A108	Ta=25℃ IF=20mA	1000小时	**# 1**	0/22

***1 失效判断标准 Criteria For Judging Damage**

标准# Standard#	项目 Parameter	测试条件 Test Condition	失效标准 Failure criteria
# 1	正向电压(V_F) Forward Voltage	I_F=20mA	＞U.S.L*1.1
	辐射强度(Ie) Radiation intensity	I_F=20mA	＜L.S.L*0.7
	反向电流(I_R) Reverse current	V_R=5V	＞U.S.L*2.0
# 2	焊接可靠性Weldingreliability	/	锡膏覆盖焊盘比例小于95% The proportion of solder paste covering pad is less than 95%

U.S.L：规格上限; L.S.L：规格下限 U.S.L: upper specification limit ; L.S.L: lower specification limit

外形尺寸

Outline Dimension

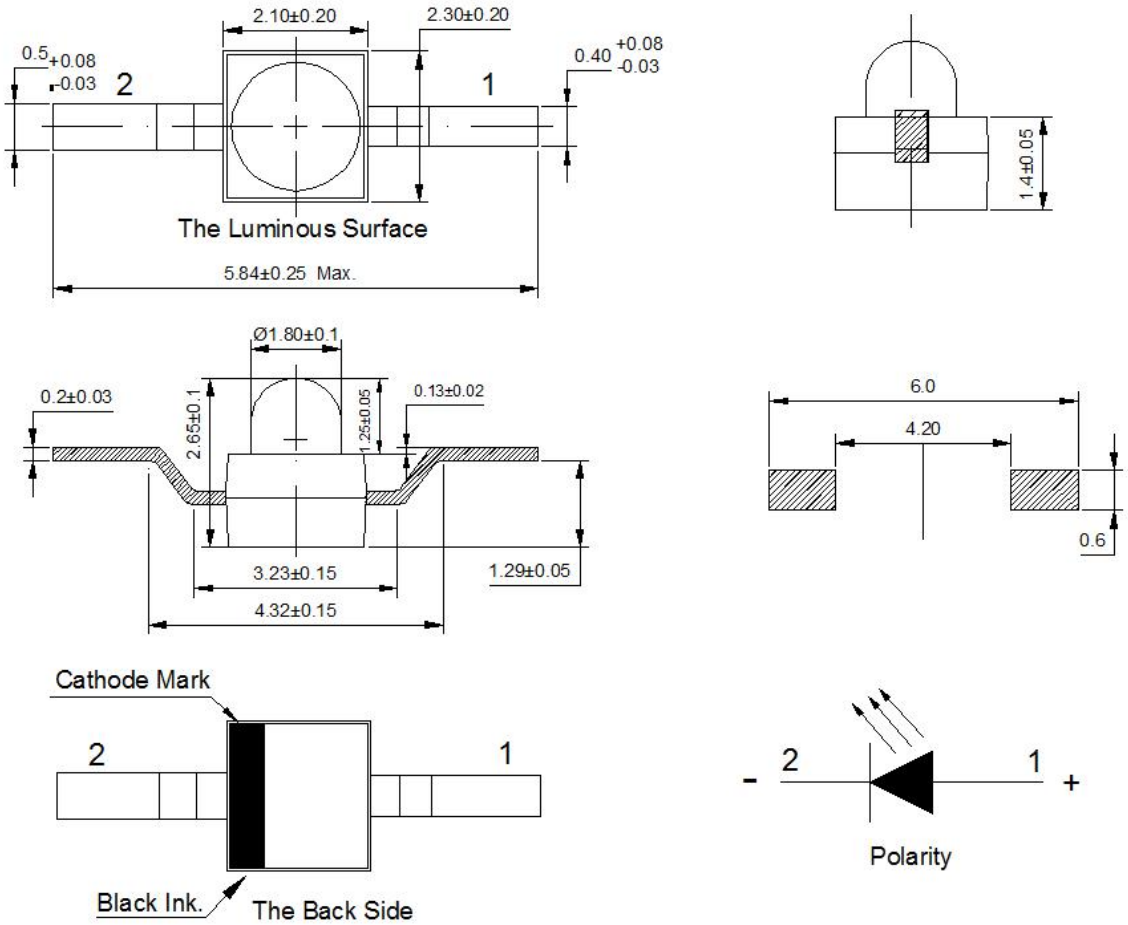

备注： 1.单位：毫米（mm）
Remarks: 1. Unit: mm

2.公差： 如无特别标注则为±0.10mm
2. Tolerance: ± 0.10mm unless otherwise specified

包装（1）

Packaging (1)

载带与圆盘尺寸 Belt and disk dimensions

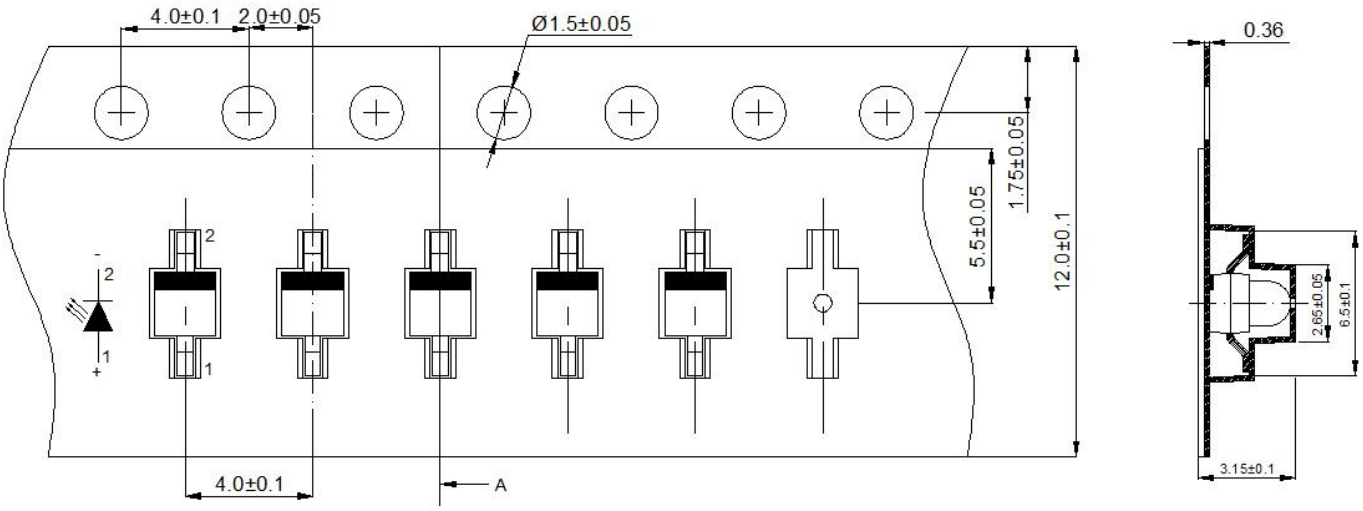

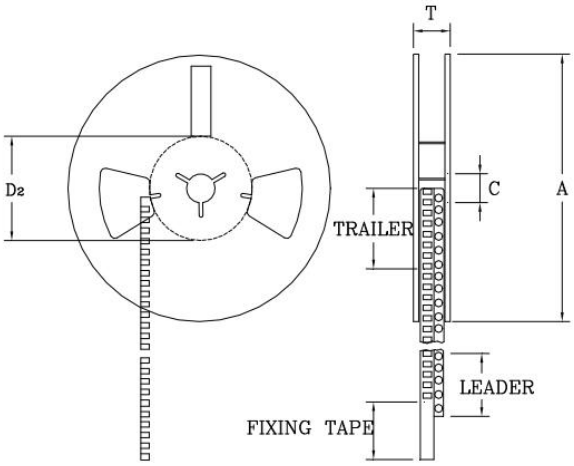

ITEM	Symbol	Specification			
		Min.		Max.	
		mm	inch	mm	inch
Flange Diameter	A	178	7.008	180	7.087
Hub Spindle Hole	C	12.5	0.492	13.5	0.531
Hub Diameter	D2	20.0	0.788	21.5	0.846
Flange Space Between Flanges	T	16.0	0.629	17.0	0.669

圆盘及载带卷出方向及空穴规格 Disk and carry

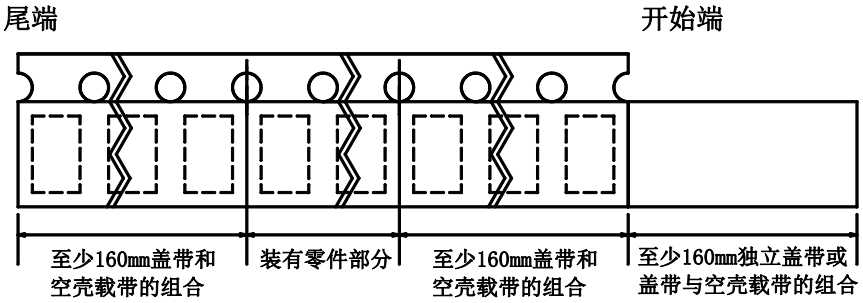

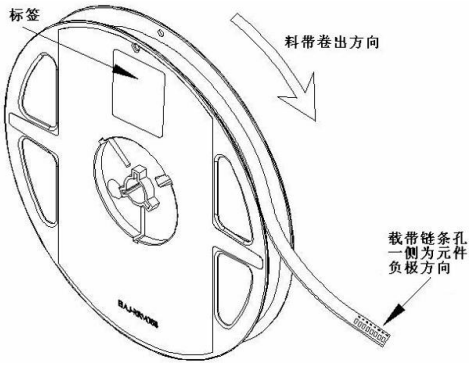

包装（2）

Packaging (2)

◇ **防潮抗静电包装 Moisture Proof and Anti-Electrostatic Foil Bag**

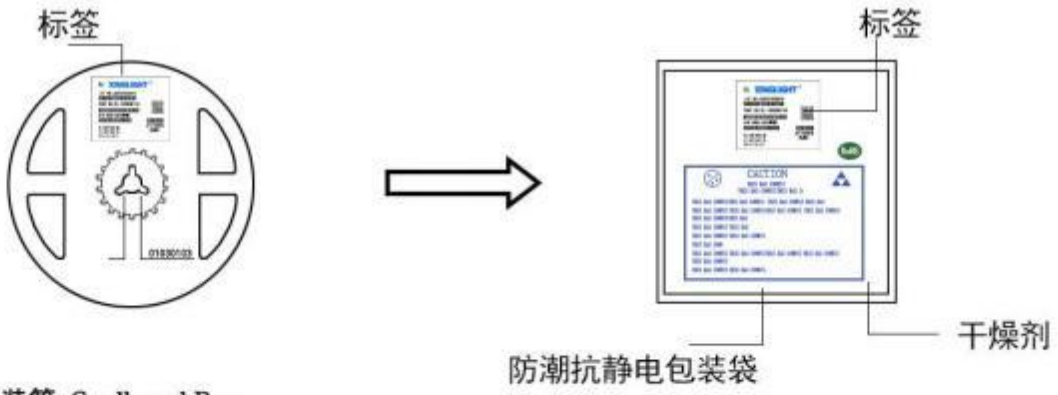

◇ **外包装箱 Cardboard Box**

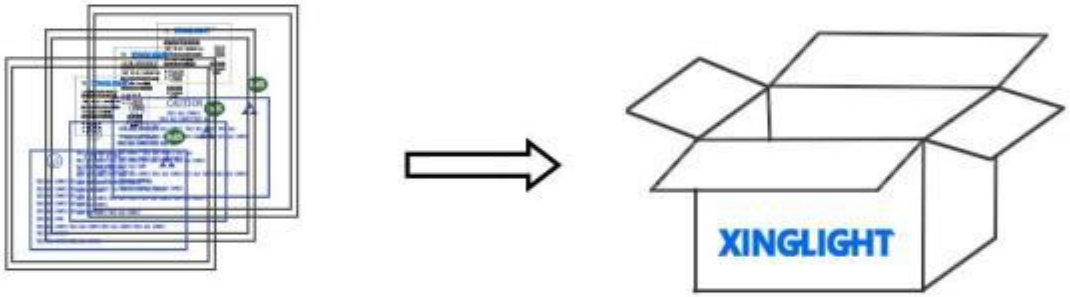

Capactiy 5 or 10 reels per box（内箱容量：50或100卷）

◇ **标签说明： Label Explantion**

LOT NO：批次信息

PART NO：产品型号

BIN CODE：产品名称

WL：波长范围

IV：光强范围

VF：电压范围

焊接指导（1）

Guideline for Soldering (1)

1. 使用烙铁人手焊接

Hand Soldering

只建议在修理和重工的情况下使用手工焊接；推荐使用功率低于 30W 的烙铁，焊接时烙铁的温度必须保持在 300℃以下，且每个电极只能进行一次焊接，每次焊接的持续时间不得超过 3 秒。人手焊接过程中的不慎操作易引起 LED 产品的损坏，应当小心谨慎。

Manual welding is recommended only for repair and heavy industry situations. A soldering iron of less than 30W is recommended to be used in Hand Soldering. Please keep the temperature of the soldering iron under 300℃ while soldering. Each terminal of the LED is to go for less than 3 second and for one time only.

Be careful because the damage of the product is often started at the time of the hand soldering.

2. 回流焊接： 推荐使用以下无铅回流焊接温度图进行。

Reflow Soldering: Use the conditions shown in the under Figure ofPb-Free Reflow Soldering.

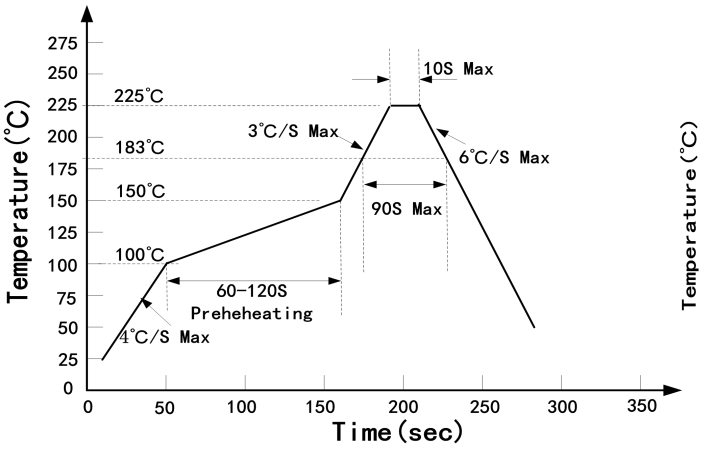

有铅制程 have lead process

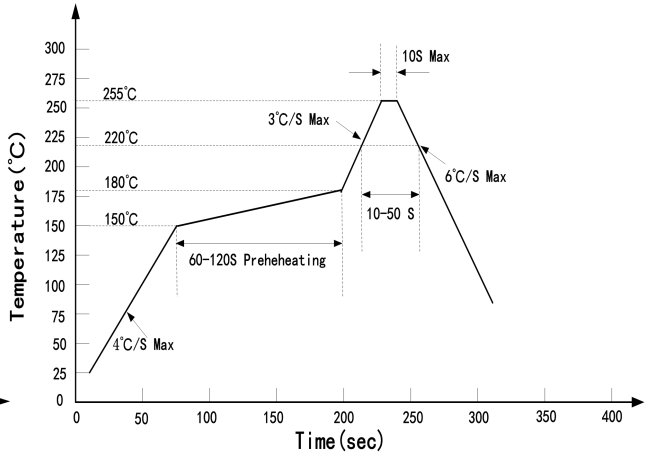

无铅制程 Lead-free process

- 回流焊接最多只能进行两次。

Reflow soldering should not be done more than two times.

- 在回流焊接升温过程中，请不要对 LED 施加任何压力。

Stress on the LEDs should be avoided during heating in soldering process.

- 在焊接完成后，待产品温度下降到室温之后，再进行其他处理。

After soldering, do not deal with the product before its temperature drop down to room temperature.

焊接指导（2）

Guideline for Soldering (2)

3. 清洗：

Cleaning

在焊接后推荐使用酒精进行清洗，在温度不高于 30℃的条件下持续 3 分钟， 不高于 50℃的条件下持续 30 秒。使用其他类似溶剂清洗前，请先确认使用的溶剂不会对 LED 的封装和环氧树脂部分造成损伤。

超声波清洗也是有效的方法，一般最大功率不应超过 300W，否则可能对 LED 造成损伤。请根据具体的情况预先测试清洗条件是否会对 LED 造成损伤。

It is recommended that alcohol be used as a solvent for cleaning after soldering. Cleaning is to go under 30℃ for 3 minutes or 50℃ for 30 seconds. When using other solvents, it should be confirmed beforehand whether the solvents will dissolve the package and the resin or not.

Ultrasonic cleaning is also an effective way for cleaning. But the influence of Ultrasonic cleaning on LED depends on factors such as ultrasonic power. Generally, the ultrasonic power should not be higher than 300W. Before cleaning, a pretest should be done to confirm whether any damage to LEDs will occur.

＊ 注意： 此一般指导原则并不适用于所有 PCB 设计和焊接设备的配置。具体工艺受到诸多因素的影响，请根据特定的PCB设计和焊接设备来确定焊接方案。

＊ Note: This general guideline may not apply to all PCB designs and configurations of all soldering equipment. The technics in practise is influenced by many factors, it should be specialized base on the PCB designs and configurations of the soldering equipment..

使用注意事项（1）

Precautions (1)

1. 贮存：

Storage

- 本产品使用密封防潮抗静电袋包装，并附有干燥剂，未开封的产品有一年的保存时间。

Moisture proof and anti-electrostatic package with moisture absorbent material is used, to keep moisture to a minimum.

- 开封前，产品须存放在温度不高于 30℃，湿度不高于 40%RH 的环境中。

Before opening the package, the product should be kept at 30℃ or less and humidity less than 40% RH, and be used within a year.

- 开封后，产品须存放在温度不高于 30℃，湿度不高于 10%RH 的环境中，且应该在 24小时（1天） 内使用完;且贴片后应尽快做焊接。建议工作环境为温度不高于 30℃，湿度不高于 40%RH。

After opening the package, the product should be stored at 30℃ or less and humidity less than 10%RH, and be soldered within 24 hours (1 day). And it should be welded as soon as possible after the patch.It is recommended that the product be operated at the workshop condition of 30℃ or less and humidity less than 40%RH.

- 对于尚未焊接的 LED，如果吸湿剂或包装失效，或者产品没有符合以上有效存储条件，烘焙可以起到一定的性能恢复效果。烘焙条件： 60±5）℃，持续 24 小时。

If the moisture absorbent material has fade away or the LEDs have exceeded the storage time, baking treatment should be performed based on the following condition: (60±5)℃ for 24 hours.

2. 静电：

Static Electricity

静电和电涌会导致产品特性发生改变，例如正向电压降低等，如果情况严重甚至会损毁产品。所以在使用时必须采取有效的防静电措施。所有相关的设备和机器都应该正确接地，同时必须采取其他防止静电和电涌的措施。使用防静电手环，防静电垫子，防静电工作服、工作鞋、手套，防静电容器，都是有效的防止静电和电涌的措施；严禁使用普通塑料制品。建议在作业过程中，使用离子风扇来压制静电的产生。距离LED元件1英尺距离的环境范围内静电场电压小于100V。

Static electricity or surge voltage damages the LEDs. Damaged LEDs will show some unusual characteristic such as the forward voltage becomes lower, or the LEDs do not light at the low current. even not light.

All devices, equipment and machinery must be properly grounded. At the same time, it is recommended that wrist bands or anti-electrostatic gloves, anti-electrostatic containers be used when dealing with the LEDs.Using ordinary plastic products are strictly prohibited.It is recommended to use ion fans to suppress the static electricity generation during the operation.The static field voltage is less than 100V within the ambient range of 1 foot distance from the LED element.

使用注意事项（2）

Precautions (2)

3. 设计建议：

Design Consideration

设计电路时，通过 LED 的电流不能超过规定的最大值，同时，还需使用保护电阻，否则，微小的电压变化将会引起较大的电流变化，可能导致产品损毁。

建议使用以下（A）电路，该电路能够很好的调节通过每个 LED 的电流； 不推荐使用（B）电路，该电路在持续的电压驱动下，LED 的正向电压（V_F）发生变化，电流会随之而发生变化，可能使某些 LED 承受高于规定的电流值。

In designing a circuit, the current through each LED must not exceed the absolute maximum rating specified for each LED. In the meanwhile, resistors for protection should be applied, otherwise slight voltage shift will cause big current change, burn out may happen.

It is recommended to use Circuit A which regulates the current flowing through each LED rather than Circuit B. When driving LEDs with a constant voltage in Circuit B, the current through the LEDs may vary due to the variation in Forward Voltage (V_F) of the LEDs. In the worst case, some LED may be subjected to stresses in excess of the Absolute Maximum Rating.

(A)

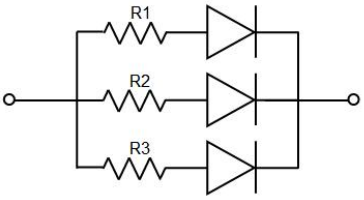

(B)

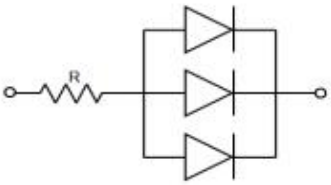

光电参数公差：

正向电压REF / VF： ± 0.1V
亮度CAT / IV： ± 15%
波长HUE / WLD： ± 1nm

LED 的特性容易因为自身的发热和环境的温度的改变而发生改变。温度的升高会降低 LED 的发光效率、影响发光颜色等，所以在设计时应充分考虑散热的问题。

Thermal Design is paramount importance because heat generation may result in the Characteristics decline, such as brightness decreased, Color changed and so on. Please consider the heat generation of the LEDs when making the system design.

使用注意事项（3）

Precautions (3)

4. 其他事项：

Others

直接用手拿取产品不但会污染封装树脂表面，也可能由于静电等因素导致产品性能的改变。过度的压力也可能直接影响封装内部的管芯和金线，因此请勿对产品施加过度压力，特别当产品处于高温状态下，例如在回流焊接过程中。

When handling the product, touching the encapsulant with bare hands will not only contaminate its surface, but also affect on its optical characteristics. Excessive force to the encapsulant might result in catastrophic failure of the LEDs due to die breakage or wire deformation. For this reason, please do not put excessive stress on LEDs, especially when the LEDs are heated such as during Reflow Soldering.

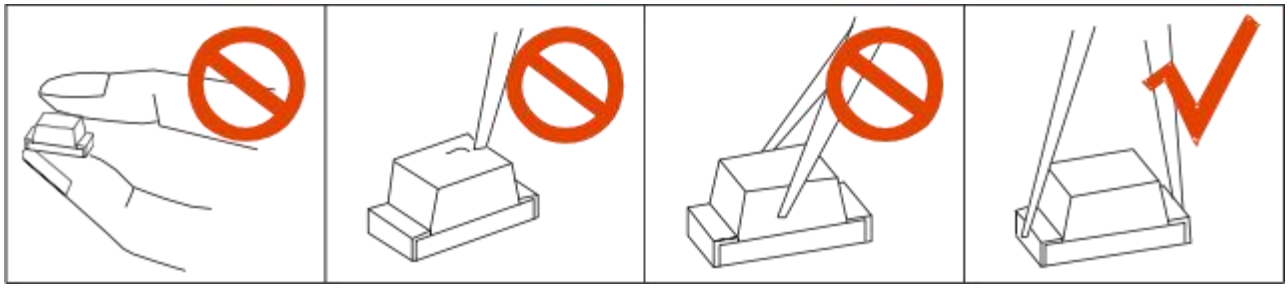

LED 的环氧树脂封装部分相当脆弱，请勿用坚硬、尖锐的物体刮、擦封装树脂部分。在用镊子夹取的时候也应当小心注意。

The epoxy resin of encapsulant is fragile, so please avoid scratch or friction over the epoxy resin surface. While handling the product with tweezers, do not hold by the epoxy resin, be careful.

5. 眼睛保护忠告：

Safety Advice For Human Eyes

LED 发光时，请勿直视发光光源，特别是对于一些光强较高的 LED，强光可能伤害你的眼睛。

Viewing direct to the light emitting center of the LEDs, especially those of great Luminous Intensity, will cause great hazard to human eyes. Please be careful.

X-ON Electronics

Largest Supplier of Electrical and Electronic Components

Click to view similar products for Infrared Emitters ***category:***

Click to view products by XINGLIGHT ***manufacturer:***

Other Similar products are found below :

LTE-3279K LTE-4208C LTE-2871C LTE-4238 ASDL-4264-C22 IR11-21CTR8 EAIPL3528Z0 OP216-004 LTE-3376 OSIXCA5B41A OSI5120631F IR234C LTE-C195IRG ZSIR-3210C-15A-C3 ZSIR-3020C-23A-Z6 IR333C-A(BY)(P) IR19-21C/TR8(BY) HIR26-21C/L423/CT(XY) IR928-6C/F1(6-1) IR423C/L10/F393(AMZ)(PF) EAISV3027A0 HIR26-81B/L423/2T IR908-7C(E5) IR204-A-L(BY)(M) IR333C-A(BY)(Q) IR928-6C(X8-X12)(XBY) IR968-8C(6-2) IR204C-A-L(BY)(M) IR968-8C(6-1) XYC-HIR76C-LX0 XYC-IRA3020A65-SX4 XYC-HIR76C-LX4 XYC-IRA3020A65-SX1 DY-IRS302320C/6.5T DY-PTS3020268B-6.5TC DY-IR-8S302320C-6.5T DY-IR928-6C XL-504IRC-940 XL-SD3036HIR-T202 NCD3012I1 NCD1005I1 XYC-IR204C-L4 XYC-IRC18C-24 XYC-IR76C30-LX4 XYC-IRA0805AC-S4 XYC-HIRWC18C-Z2 XYC-IRP0603AC-A2 XYC-IRA2835A90-X4 XYC-IR333C-L4 XYC-IRA2835AC-J4